PUBLIC

2017-05-25

SAP Revenue Accounting and Reporting



Content

1 SAP Revenue Accounting and Reporting. 7

2 What's New in Revenue Accounting and Reporting. 8

2.1 Release 1.1. 8

Integration with SAP Billing and Revenue Innovation Management. 8

Enhancements in the Revenue Accounting Item Monitor. 10

Processing of Return Orders. 11

Reconciliation of Revenue Accounting Items with Contracts. 12

Enhancement of Account Determination. 13

Planned Invoices for Billing Plans. 15

Archiving Revenue Accounting Contracts and Items. 16

Determining Quantities and Amounts in Revenue Accounting. 17

Migration by Package. 18

Improvement in Closing Activities. 20

Further Flexibility in Posting Process. 21

Prospective Change. 23

Enhanced Reconciliation Functions. 24

3 Integration of Sender Components. 25

3.1 SAP Sales and Distribution Integration with SAP Revenue Accounting and Reporting. 25

3.2 Integration with SAP Billing and Revenue Innovation Management. 26

3.3 Integration of External Sender Components. 27

4 Inbound Processing. 28

4.1 Basic Concepts of Inbound Processing. 28

Revenue Accounting Item. 28

Class for Revenue Accounting Items. 29

4.2 Configuration of Revenue Accounting Item Classes. 29

System Landscape. 31

Interfaces for Revenue Accounting Item Classes. 32

Customer Fields in Revenue Accounting Item Classes. 32

Interface Generation. 33

4.3 Adding Accounts to Revenue Accounting Items. 35

4.4 Changing of Raw Data and Error Handling. 36

4.5 Transfer of Revenue Accounting Items to Processable Status. 37

4.6 Processing Revenue Accounting Items. 38

BRFplus Functions Executed During Processing. 39

Determining Quantities and Amounts. 43

Generating Planned Invoices. . . . 44
Processing of Order Items with Predecessor Items. . . . 44
4.7 Displaying Revenue Accounting Items. . . . 45
4.8 Reconciliation of Revenue Accounting Items with Contracts. . . . 47
4.9 BRFplus Simplified User Interface. . . . 48

5 Contract Management. . . . 49
5.1 Performance Obligations. . . . 49
Linked Performance Obligations. . . . 49
Performance Obligation Hierarchies. . . . 50
Manual Performance Obligations. . . . 51
Deletion of Performance Obligations. . . . 52
5.2 Revenue Accounting Contracts. . . . 54
Contract Creation. . . . 54
Changes to Contracts. . . . 54
Contract Search and Display. . . . 61
Validation and Error Handling. . . . 63
Regular Monitoring. . . . 65
5.3 Operational Documents. . . . 66
5.4 Rights of Return. . . . 66
5.5 Support of Multiple Accounting Principles. . . . 68
5.6 Status Management. . . . 70
5.7 Support of Multiple Currencies. . . . 71
5.8 Reprocessing. . . . 72

6 Price Allocation. . . . 74
6.1 Price Determination. . . . 74
Condition Exclusion List. . . . 74
Contractual Price. . . . 74
6.2 Standalone Selling Price-Weighted Allocation. . . . 75
6.3 Standalone Selling Price Tolerances. . . . 76
6.4 Residual Price Allocation. . . . 77
6.5 Performance Obligations Excluded from Allocation. . . . 79
6.6 Customized Allocation. . . . 79
6.7 Allocation Effect. . . . 80
6.8 Price Allocation for Structured Performance Obligations. . . . 81

7 Contract Change. . . . 83
7.1 Invoicing. . . . 84
7.2 Change of Estimates. . . . 86
7.3 Contract Modification. . . . 88
Prospective Changes. . . . 89

Retrospective Changes. . . . 93
Mixed Changes. . . . 95
7.4 Attributes Change from Inception Date. . . . 97
7.5 Determination of Contract Change Type. . . . 97

8 Fulfillment of Performance Obligations. . . . 99
8.1 Event-Based Fulfillment. . . . 99
8.2 Time-Based Fulfillment. . . . 99
Spreading. . . . 100
Duration of Fulfillment. . . . 103
8.3 Fulfillment by Percentage of Completion. . . . 105
8.4 Manual Fulfillment. . . . 105

9 Revenue Posting. . . . 107
9.1 Revenue Posting in Three Steps. . . . 111
9.2 Calculation and Distribution of Contract Liability/Asset or Unbilled Receivable/Deferred Revenue 113
Calculation of Contract Liability and Asset. . . . 113
Distributing Contract Liability and Asset to Performance Obligation Level. . . . 114
9.3 Start a Revenue Posting Run. . . . 115
9.4 Job Monitor. . . . 116
9.5 Revenue Posting Reversal. . . . 118
9.6 Account Determination. . . . 119
9.7 Revenue-Related Events and Postings. . . . 123
9.8 Revenue Accounting Close. . . . 128
9.9 Shifting Contracts with Failed Postings to the Next Period. . . . 129
9.10 Integration with the Financial Closing Cockpit. . . . 130

10 Reconciliation. . . . 131
10.1 Reconciliation: Revenue Posting and General Ledger. . . . 131
10.2 Reconciliation: Revenue Accounting Items and Revenue Accounting. . . . 132

11 Reporting. . . . 138
11.1 Reconciliation for Accountants. . . . 138
11.2 Sample Reports. . . . 141
11.3 DataSources. . . . 141
Revenue Analysis by Posting Item. . . . 141
Allocated Price Change of POB. . . . 144
Revenue Forecast. . . . 146
Revenue Object Attribute. . . . 148
Revenue Contract. . . . 149
Performance Obligation. . . . 151
Reconciliation Key. . . . 154

Contract Status Text. . . . 155
Reconciliation Key Status Text. . . . 156
Contract Category Text. . . . 157
Event Type Text. . . . 158
POB Type text. . . . 159
Fulfill Type Text. . . . 160
POB Role Text. . . . 161
POB Status Text. . . . 162
Post Category Text. . . . 163
Start Date Type Text. . . . 164
Distinct Type Text. . . . 165
POB Special Indicator Text. . . . 166
Review Reason Text. . . . 167
Validation Result Text. . . . 168

12 Administration and Maintenance. . . . 170
12.1 Roles. . . . 170
Revenue Accountant. . . . 170
Revenue Accounting Administrator. . . . 170
Revenue Accounting Auditor. . . . 171
Revenue Accounting RFC User. . . . 171
12.2 Migration from a Legacy System. . . . 172

13 Migration. . . . 173
13.1 Overall Approach. . . . 173
Data Migration Overview. . . . 173
Details Regarding the Migration Steps. . . . 177
13.2 Supported Scenarios. . . . 185
Sales and Distribution. . . . 186
Customer Relationship Management, Service Application. . . . 187
Hybris Billing. . . . 192
Hybris Billing with Sales and Distribution. . . . 195
Third Party Sender. . . . 197
13.3 Migration for Integration with Cost Object Controlling. . . . 197

14 Archiving. . . . 199
14.1 Archiving of Revenue Accounting Contracts (FARR_CONTR). . . . 199
Checks (FARR_CONTR). . . . 201
Application-Specific Customizing (FARR_CONTR). . . . 201
Variant Settings for Archiving (FARR_CONTR). . . . 201
Displaying Archived Revenue Accounting Contracts (FARR_CONTR). . . . 202
14.2 Archiving of Revenue Accounting Items (FARR_RAI). . . . 203

Checks (FARR_RAI). . . . 205
Application-Specific Customizing (FARR_RAI). . . . 205
Variant Settings for Archiving (FARR_RAI). . . . 205
Displaying Archived Revenue Accounting Items (FARR_RAI). . . . 206

15 Extensibility. . . . 207
15.1 Field Extensibility. . . . 207
Field Extensibility in Revenue Accounting Item Processing. . . . 209
Field Extensibility for Revenue Accounting Contracts. . . . 210
Field Extensibility for Revenue Reporting. . . . 212
15.2 Business Add-Ins. . . . 213
Validation of Status Change. . . . 214
Enhance Revenue Accounting Items (Raw Items). . . . 214
Enhance Revenue Accounting Items (Processable Items). . . . 215
Combination of Contracts. . . . 217
Price Allocation. . . . 217
Deferral Method. . . . 218
Account Assignment Derivation. . . . 218
Custom Validations. . . . 219
Posting Enhancements. . . . 219
Compound Fulfillments. . . . 219
Review Worklist Enhancements. . . . 220
Change Mode Determination of Performance Obligations. . . . 220
RAI Reconciliation with non-SAP Sender Components. . . . 220

1 SAP Revenue Accounting and Reporting

Product Information

Table 1:

Product	SAP Revenue Accounting and Reporting
Release	1.1 SP08
Based On	SAP EHP 5 for SAP ERP 6.0
Documentation Published	May 2017

Use

Revenue Accounting and Reporting enables you to manage revenue recognition in a process that involves the following high-level steps:

- Identify contracts
  In this step, you create revenue accounting contracts corresponding to operational documents that are created on a back-end operational system.
- Identify performance obligations
  In this step, you identify the performance obligations included in each contract. You create performance obligations for items in the operational document and manage their relationships with one another.
- Allocate the transaction price
  In this step, you determine the total price by aggregating the pricing conditions passed from the back-end operational system, and then allocate the total price among the performance obligations.
- Manage fulfillment of performance obligations
  In this step, you recognize revenue for performance obligations as they are fulfilled.
- Make revenue postings
  In this step, you make postings to the general ledger regularly to reflect revenue-related transactions.

2 What's New in Revenue Accounting and Reporting

Use

This section contains all release notes. You can use the navigation structure on the left to find a specific release note.

2.1 Release 1.1

Use

This section contains all release notes. You can use the navigation structure on the left to find a specific release note.

2.1.1 Integration with SAP Billing and Revenue Innovation Management

Use

You can connect SAP Billing and Revenue Innovation Management (BRIM) with Revenue Accounting.

Technical Details

Table 2:

Technical Name of Product Feature	`FIRA_BRIM_INTEGRATION`
Product Feature Is	New
Country Dependency	Valid for all countries
Software Component Version	`REVREC 110`
Application Component	`FI-RA` (Revenue Accounting)

Available As Of	Release 1.1
Required Business Functions	None

Additional Details

The prerequisites for this integration are:

- You are using Contract Accounts Receivable and Payable (FI-CA) as part of one of the following industry components, and you are using SAP Convergent Invoicing and provider contracts:
  - Contract Accounts Receivable and Payable
  - Telecommunications
  - Utilities
- If you are using SAP Customer Relationship Management, you have activated business function `CRM_PROVORDERINT_3_9` (Integration of SAP CC and SAP CI with Provider Order for EHP3 SP09).
- You have activated the business function `FICA_EHP7_RA` (Integration with Revenue Accounting) (in SAP ERP).

If you have integrated SAP Customer Relationship Management (SAP CRM), SAP Convergent Invoicing (in SAP ERP) and SAP Convergent Charging (SAP CC) in the Offer-to-Cash end-to-end process, the integration with Revenue Accounting takes place solely by means of the ERP system. The ERP system transfers all necessary data to Revenue Accounting.

Effects on Customizing Settings

SAP provides the sender component `CA` (SAP O2C) with Revenue Accounting.

You make the following system settings in Customizing for Revenue Accounting under *Inbound Processing*.

1. Under *Revenue Accounting Item Management*, define logical systems and assign them to sender component `CA` (SAP O2C) in the *Define Sender Components* IMG activity.
2. Under *Revenue Accounting Items* create revenue accounting item classes `CA01`, `CA02`, and `CA03`, and generate them.
   The technical names are set by SAP. This ensures that the system automatically provides the required settings for each class when it is generated.
   The revenue accounting item class `CA01` defines the technical properties of order items. Class `CA02` defines the technical properties of fulfillment items, and class `CA03` defines those of invoice items.

You activate the integration with Revenue Accounting and configure the RFC destination to the revenue accounting system, meaning the system, in which SAP Revenue Accounting and Reporting is running, in Customizing for Contract Accounts Receivable and Payable.

More Information

See the information about integration in the documentation for Contract Accounts Receivable and Payable under *Integration* > *Revenue Accounting*.

Also see the documentation of the business functions `CRM_PROVORDERINT_3_9` and `FICA_EHP7_RA`.

2.1.2 Enhancements in the Revenue Accounting Item Monitor

Use

In the revenue accounting item monitor, you can now:

- Display legacy data
- Process data from the initial load

Technical Details

Table 3:

Technical Name of Product Feature	`FIRA_RAI_MONITOR`
Product Feature Is	New
Country Dependency	Valid for all countries
Software Component Version	`REVREC 110`
Application Component	`FI-RA` (Revenue Accounting)
Available As Of	Release 1.1
Required Business Functions	None

Additional Details

Displaying Legacy Data

On the initial screen of the revenue accounting item monitor (transaction `FARR_RAI_MON`), you can specify in your personal settings that the monitor also displays legacy data (from previous systems). Choose the *Personalize* pushbutton, and select one of the following settings:

- No Legacy Data
  This is the default setting. The monitor does not select any legacy data, if you choose this setting.

- Allow Display of Legacy Data in Item Display
  If you choose this setting, the monitor does not select legacy data automatically. However, if you choose the *(+) Legacy Data* (*Display Legacy Data*) pushbutton in the item list, you can show legacy data.
- Always Display Legacy Data
  If you choose this setting, the monitor always selects legacy data. You can hide the legacy data by choosing the *(-) Legacy Data* (*Hide Legacy Data*) pushbutton in the item list.

The system saves your settings in the `FARR_MON_SEL` user parameter and uses them the next time you call the monitor.

If you display legacy data, the monitor shows a new tab for each of the following: legacy data for main items, legacy data for condition items, and legacy data for planned fulfillment items.

Processing Data from the Initial Load

Up to now you could only process items with field value 1 in `INITIAL_LOAD` (*Initial Load Due to New Co. Code or Migr. Package*) using transaction `FARR_RAI_PROC_LOAD` (*Initial Load: Process Rev Acc Items*).

Once you have selected items from the initial load, the *Process Initial Load* pushbutton now appears in the display of processable items.

Items that were generated by an initial load due to a new company code or migration package can only be processed if you choose the *Process Initial Load* pushbutton. All other items can be processed only by choosing the *Process* pushbutton.

2.1.3 Processing of Return Orders

Use

Order items now have the following fields as references to their predecessor items:

- Predecessor Item Sender Component
- Logical System of the Predecessor Item
- Predecessor Item Type
- Predecessor Item ID

The fields are contained in interface component `BASIC_MI01` and are therefore available in all order items.

If an order item is related to a predecessor item, the system does not treat the order item as a separate and independent item. Instead the system aggregates its quantities and amounts with those of the predecessor item. When the revenue is posted, the system treats the aggregated data as a change to the predecessor item.

Multiple revenue accounting items are allowed to refer to the same predecessor item. However, the total quantity and total amount are not allowed to take on a negative value after all the items are aggregated.

Each of the items and its predecessor item must have the same company code, currencies, units of measure, and setting for its value relevance.

Technical Details

Table 4:

Technical Name of Product Feature	`FIRA_RETURN_ORDER_HNDLG`
Product Feature Is	New
Country Dependency	Valid for all countries
Software Component Version	`REVREC 110`
Application Component	`FI-RA` (Revenue Accounting)
Available As Of	Release 1.1
Required Business Functions	None

Additional Details

The following example illustrates how the fields are used during processing of order items, based on a return in Sales and Distribution (SD).

Example

1. A customer orders three televisions for 500 each.
2. Revenue Accounting creates a revenue accounting item for this order with a quantity of 3 and an amount of 1500, and generates the revenue postings.
3. One of the televisions is damaged in transport.
4. Revenue Accounting creates an additional order item with a quantity of -1 and an amount of -500. This item refers to the original (predecessor) order item.
5. Revenue Accounting offsets the item for the return against the original order item.
6. When the revenue posting is made, the system takes the change of the original order item into account with a newly calculated quantity of 2 and an amount of 1000.

2.1.4 Reconciliation of Revenue Accounting Items with Contracts

Use

There is a program (transaction `FARR_RAI_RECON`) you can use to ensure data consistency between revenue accounting items and revenue accounting contracts. You do so by reconciling the processed revenue accounting items with the determined performance obligations. The system checks if the amounts and quantities are the same in both. If the program determines there are differences in the quantity or amount, the system saves these

performance obligations. The next time a reconciliation is performed, the program checks these saved performance obligations first.

Technical Details

Table 5:

Technical Name of Product Feature	`FIRA_RAI_CONTR_RECONCILIATION`
Product Feature Is	New
Country Dependency	Valid for all countries
Software Component Version	`REVREC 110`
Application Component	`FI-RA` (Revenue Accounting)
Available As Of	Release 1.1
Required Business Functions	None

Affects on Customizing Settings

The report parallelizes the selected data during processing. You specify the number of jobs that can be executed in parallel in SAP Customizing under *Cross-Application Components* > *General Application Functions* > *Parallel Processing and Job Control* > *Parallel Processing* > *Maintain Job Distribution*.

2.1.5 Enhancement of Account Determination

Use

You can completely move the determination of G/L accounts to Revenue Accounting. Then sender systems no longer have to provide the accounts.

Revenue Accounting determines the G/L accounts to be posted for order items using Customizing rules from the transferred revenue accounting items. The system derives the G/L accounts for fulfillment items and invoice items using the reference to the order item.

Technical Details

Table 6:

Technical Name of Product Feature	FIRA_ACCT_DETERMINATION
Product Feature Is	New
Country Dependency	Valid for all countries
Software Component Version	REVREC 110
Application Component	FI-RA (Revenue Accounting)
Available As Of	Release 1.1
Required Business Functions	None

Additional Details

Up to now, you could determine the target accounts that are to be posted by using Customizing rules from reference accounts that the sender system transfers in order items and invoice items. The target accounts are used, for example, for posting recognized revenue or for adjusting receivables.

This function remains unchanged.

However, as a separate option, you can now determine G/L accounts completely within Revenue Accounting, using characteristics of order items.

To derive the G/L accounts from characteristics of order items, the sender system has to set the *Determine Revenue Accounts with BRFplus* indicator in main conditions. The sender system must also set the *Determine P+L Accounts with BRFplus* indicator in condition records.

If these indicators are set, then the system derives the G/L accounts during the processing of order items in a step that comes before the account determination used up to now. After that, the system processes the enriched items exactly as if the sender system had transferred them with G/L accounts.

This ensures compatibility between the solution used until now and the new solution.

You define in Customizing for each revenue accounting item class which characteristics Revenue Accounting uses to derive which G/L accounts.

The system derives the G/L accounts for fulfillment items and invoice items using the reference to the order item.

Affects on Customizing Settings

You make settings for deriving G/L accounts from reference accounts (provided by SAP) in Customizing for Revenue Accounting under *Revenue Accounting* > *Revenue Accounting Postings* > *Configure Account Determination for Specific Transactions*.

To derive the G/L accounts from order items:

1. Enter the derivation rules for G/L accounts in Customizing for Revenue Accounting under *Inbound Processing* > *Revenue Accounting Item Management* > *Assign BRFplus Applications to Revenue Accounting Item Classes*, by assigning BRFplus applications to the revenue accounting item class of the *Order Item* class type.
2. For each order item class, enter an ABAP structure that references the BRFplus application. In Customizing for Revenue Accounting, choose *Inbound Processing* > *Revenue Accounting Item Management* > *Maintain BRFplus Structure*.
   In this way, you can derive the G/L accounts from any characteristics of order items.

> **Note**
>
> If you want to derive G/L accounts based on customer fields, you have to define the BRFplus structure first in Customizing. Then you can add the fields to the revenue accounting item class and generate the class. Once this is done, the fields are available when you define your BRFplus application.

2.1.6 Planned Invoices for Billing Plans

Use

During processing of revenue accounting items, you can automatically generate invoices for items of a billing plan. For this to take place, the sender system has to fill the *Invoice Category* attribute on the invoice items accordingly.

Technical Details

Table 7:

Technical Name of Product Feature	`FIRA_PLANNED_INVOICES`
Product Feature Is	New
Country Dependency	Valid for all countries
Software Component Version	`REVREC 110`
Application Component	`FI-RA` (Revenue Accounting)
Available As Of	Release 1.1
Required Business Functions	None

Additional Details

In Revenue Accounting, the total amount and total quantity of billing plans are represented by an order item that is valid for the entire duration of the payment plan. In addition to this, information about the due dates and amounts of the billing plan is stored in invoice items. If a payment plan date is invoiced, then the sender system has to forward an additional invoice item with the billing document data to Revenue Accounting.

You can now also generate the actual invoice items in Revenue Accounting. This is to support scenarios in which actual invoicing usually corresponds to the billing plan, and therefore you do not want to connect the billing system to Revenue Accounting (or it might not be possible).

If you want the system to generate an actual invoice from a planned invoice item of a billing plan on the posting date, then the invoice must have invoice category 2. In addition, the *Invoice Corrections from Billing Plan* (`BILLING_PLAN_INV`) indicator has to be set on the order item of the billing plan.

Invoice items of invoice category 2 keep the status *Processable* until their posting date is reached. If they are processed after their posting date has been reached, then actual invoices are created from them. These invoices then result in postings. When the actual invoice items are generated, the values in foreign currency are updated.

You can change invoice items of invoice category 2 until their posting date is reached. After the posting date is reached, changes are no longer possible, since it could be the case that postings were already made based on this data. Therefore, after the posting date is reached, you have to reverse these invoices and create new ones to make a change, the same as you would for actual invoices.

2.1.7 Archiving Revenue Accounting Contracts and Items

Use

You can archive revenue accounting items and revenue accounting contracts.

Technical Details

Table 8:

Technical Name of Product Feature	`FIRA_ARCHIVING`
Product Feature Is	New
Country Dependency	Valid for all countries
Software Component Version	`REVREC 110`
Application Component	`FI-RA` (Revenue Accounting)
Available As Of	Release 1.1

Required Business Functions	None

Additional Details

Archiving of revenue accounting contracts takes place using the archiving object `FARR_CONTR`. You can archive revenue accounting contracts if the following applies for the revenue accounting contracts to be archived:

- They have the contract status *Closed*.
- The date on which they were closed is entered in the contract.
- They are updated.

In addition, the date on which the contract was closed must be further in the past than the amount of time specified by the residence time.

Archiving of revenue accounting items takes place using the archiving object `FARR_RAI`. You can archive a revenue accounting item, if the revenue accounting contract, to which the revenue accounting item relates, is deleted.

Effects on Customizing Settings

You define the residence time for revenue accounting contracts and activate the archive information structure in Customizing for Revenue Accounting under *Revenue Accounting* > *Revenue Accounting Contracts* > *Archiving*.

You activate the archive information structure for revenue accounting items in Customizing for Revenue Accounting under *Revenue Accounting* > *Inbound Processing* > *Archiving*.

2.1.8 Determining Quantities and Amounts in Revenue Accounting

Use

Sender systems can transfer revenue accounting items that do not contain a quantity and do not contain an amount. Revenue Accounting determines quantities and amounts when it processes revenue accounting items.

Technical Details

Table 9:

Technical Name of Product Feature	`FIRA_ESTIMATED_QUANTITIES`
Product Feature Is	New
Country Dependency	Valid for all countries
Software Component Version	`REVREC 110`
Application Component	`FI-RA` (Revenue Accounting)
Available As Of	Release 1.1
Required Business Functions	None

Additional Details

For determining quantities and amounts (prices) per unit, SAP provides the BRFplus function `FC_RAI_EST_QUAN_DET`.

Example

You provide services to customers.

The performance obligation is consumption-based.

The price of the performance obligation depends on how many units the customer consumes until the duration of the performance obligation ends.

Based on the data transferred in the revenue accounting items, you use the BRFplus function `FC_RAI_EST_QUAN_DET` to estimate the amount consumed and to determine the average price per unit of measure.

The amount of the performance obligation is determined by multiplying the estimated quantity by the average price per unit.

2.1.9 Migration by Package

Use

Up to now, it was only possible to perform initial load for a complete company code.

Now you can load revenue accounting items to Revenue Accounting with finer granularity than an entire company code and already use the company code productively.

To load data to already productive company codes, you define migration packages.

Technical Details

Table 10:

Technical Name of Product Feature	FIRA_PACKAGE_MIGRATION
Product Feature Is	New
Country Dependency	Valid for all countries
Software Component Version	REVREC 110
Application Component	FI-RA (Revenue Accounting)
Available As Of	Release 1.1
Required Business Functions	None

Additional Details

Example

You want to migrate a very large company code to Revenue Accounting.

As the first step, you transfer the data of a particular customer group to Revenue Accounting and set the company code to productive. Later, you gradually transfer additional customer groups of the company code and thereby set the company to productive over time.

A migration package contains all data for a certain customer group in a company code.

You set the status of an individual migration package in a company code to *Migration* or *Productive*. The prerequisite for this is that the combination of company code and accounting principle without a migration package is already productive, and that the transfer date of the new migration package is after the transfer date of the already productive migration packages.

During the transfer of revenue accounting items, the sender system transfers the migration package in the MIG_PACKAGE field to the main items of order items.

In transaction FARR_RAI_PROC_LOAD, you can start the processing of revenue accounting items from the initial load for individual migration packages. The system only processes revenue accounting items from migration packages that have the status *Migration* and that have a posting date (event date) before the transfer date of the migration package.

If problems occur during the migration of a package, you can delete the data transferred in the package. To do so, you use transaction FARR_IL_CLEANUP. This is only possible as long as the package has the status *Migration* and no postings have been made.

Effects on Customizing Settings

You define migration packages in Customizing for Revenue Accounting under *Revenue Accounting Contracts* > *Define Migration Packages*.

You set the status of migration packages in Customizing for Revenue Accounting under *Revenue Accounting Contracts* > *Assign Company Codes to Accounting Principles* in the *Assignment of Migration Packages* group box.

2.1.10 Improvement in Closing Activities

Use

We enhance revenue accounting close for granular posting and add new check logic for revenue accounting close. Revenue accounting period (RA period) has a new status In Closing. In this status, new business will result in the next RA period while the accountant can still conduct accrual run for the current RA period.

You can shift an error contract to the next period and close the current RA period in order to process your businesses. We enhance three granular posting transactions, namely Calculate Liability and Asset, Calculate Time-based Revenue, and Revenue Posting, to support SAP Financial Closing Cockpit.

Technical Details

Table 11:

Technical Name of the Product Feature	`FIRA_CLOSING`
The product feature is	Enhanced
Country Dependency	Valid for all countries
Software Component Version	REVREC 110
Application Component	FI-RA
Availability	SAP Revenue Accounting and Reporting 1.1
Prerequisite Business Functions	N.A.

Additional Details

In Revenue Accounting 1.0, you can set two statuses in a revenue accounting period, that is, Open and Close, controlled by period. In Revenue Accounting 1.1, we have a new status.

- *Open*: Events can still request a reconciliation key in a certain period and are included in revenue posting in the period.
- *Close*: When events request a reconciliation key in a certain period, if you set the Close status, the system provides an open key in the next period. You cannot run revenue posting when the revenue accounting period is closed.
- *In Closing*: When events request a reconciliation key in a certain period, the system provides an open key in the next period, but you can still run revenue posting in this certain period.

To close the RA period, you can choose close revenue accounting period when conducting revenue posting. Then you can shift contracts to the next period only when the current RA period is in the In Closing status. Once the contracts have been shifted to next RA period, you are not able to re-open the closed period unless you register the three revenue accounting programs in SAP Financial Closing Cockpit.

2.1.11 Further Flexibility in Posting Process

Use

The Revenue Accounting system manages revenue recognition using objects such as revenue accounting contracts and performance obligations. The system receives events that relate to revenue recognition and tracks the fulfillment of performance obligations. However, revenue postings do not occur at the times of those events. The accountant performs revenue posting jobs regularly to post FI documents to the general ledger. For example, the accountant may run a revenue posting job at the end of each accounting period to transfer revenue recognition transactions to the general ledger.

Technical Details

Table 12:

Technical Name of the Product Feature	`FIRA_POSTING_IMPROVE`
The product feature is	New
Country Dependency	Valid for all countries
Software Component Version	REVREC 110
Application Component	FI-RA
Availability	SAP Revenue Accounting and Reporting 1.1
Prerequisite Business Functions	N.A.

Additional Details

The general task of revenue posting is divided into three steps. The accountant runs three separate programs to complete these steps: calculating time-based revenue, calculating contract liability and asset, and performing the revenue posting run.

In Revenue Accounting and Reporting 1.1, you can post revenue using a single revenue posting run instead of reconciliation keys.

Effects on Existing Data

Compared to Revenue Accounting and Reporting 1.0, the purpose of the reconciliation key in Revenue Accounting and Reporting 1.1 has changed. In Revenue Accounting and Reporting 1.0, the reconciliation key works as a posting bucket for one company code and one accounting principle. It also connects revenue accounting and FI. In Revenue Accounting and Reporting 1.1, on the other hand, to achieve postings with the same granularity (that is, postings on the contract level), the reconciliation key works as an event counter for each contract. The length of the reconciliation key has been extended from 10 digits to 14.

The general task of posting revenue is divided into three steps. The accountant runs three separate programs to complete these steps:

1. Calculating time-based revenue
2. Calculating contract liabilities and assets
3. Performing the revenue posting run

Revenue Accounting and Reporting 1.1 offers two new UIs for calculating time-based revenue and calculating contract liabilities and assets.

The system allows you to simulate a revenue posting run in simulation mode. You can use the simulated results to verify account determination, account assignments, debit/credit side, and posting amounts. Additionally, the simulation mode allows you to select specific contracts and performance obligations to simulate postings. The simulation mode provides three views for simulation: You can simulate the results by accounts, by performance obligations, and by postings.

In a revenue posting run, you can simulate postings using transaction `RWIN` (*General Ledger Posting*) to check whether errors occur in this transaction, such as when the posting period is closed or an account number is not valid. You can check the result of a test run in the job monitor.

When the posting check is selected in revenue posting run, the program checks the contracts one by one to verify the possibility of making a revenue posting for that contract. If any contract fails the check, the contract is rolled back in the actual postings.

Effects on Data Transfer

In Revenue Accounting and Reporting 1.1, postings with greater granularity is supported, which leads to changes in the data structure and the business process model. Data created in Revenue Recognition 1.0 is supported in the new version.

Effects on System Administration

The revenue posting user interfaces do not provide options for you to schedule a recurring job. However, the three programs for revenue posting are all available as ABAP programs. The ABAP programs provide more flexibility, and you can schedule recurring jobs by using the ABAP built-in scheduling framework.

2.1.12 Prospective Change

Use

Contract modifications that have resulted from changes to scope or price (or both) lead to either a prospective change or a retrospective change.

Retrospective changes apply the modification to both fulfilled and unfulfilled parts in a revenue accounting contract. Prospective changes only apply the modification to unfulfilled parts.

Technical Details

Table 13:

Technical Name of the Product Feature	N.A.
The product feature is	New
Country Dependency	Valid for all countries
Software Component Version	REVREC 110
Application Component	FI-RA
Availability	SAP Revenue Accounting and Reporting 1.1
Prerequisite Business Functions	N.A.

Additional Details

By default, the system uses standard rules to determine whether a change is prospective or retrospective. You can enhance the BAdI (`FARR_CHANGE_MODE_DETERMINATION`) by defining your own rules.

To define your rules, go to Customizing and choose *Financial Accounting* > *Revenue Accounting* > *Revenue Accounting Contracts* > *Business Add-Ins* > *BAdI: Determination of Contract Modification for Performance Obligations*

2.1.13 Enhanced Reconciliation Functions

Use

Revenue Accounting receives data from different components, such as SD or CRM, and then posts documents into General Ledger Accounting (FI-GL) and Profitability Analysis (CO-PA). The system logs any errors that occur in the communication between the components and processing in the Adapter Reuse Layer (ARL).

Consequently, you need to reconcile data until the data processed in ARL and data finalized in the revenue accounting engine are consistent. You still need a summary report to reconcile data between revenue accounting items and the revenue accounting engine. You need to perform the reconciliation regularly.

Technical Details

Table 14:

Technical Name of the Product Feature	`FIRA_RECONC_ENHANCE`
The product feature is	New
Country Dependency	Valid for all countries
Software Component Version	REVREC 110
Application Component	FI-RA
Availability	SAP Revenue Accounting and Reporting 1.1
Prerequisite Business Functions	N.A.

Additional Details

In Revenue Accounting and Reporting 1.1, we have enhanced reconciliation for performance obligations with bills of material.

3 Integration of Sender Components

The following sections provide information about the integration of components that transfer operative data (such as orders, invoices, and order fulfillments) to Revenue Accounting.

3.1 SAP Sales and Distribution Integration with SAP Revenue Accounting and Reporting

Prerequisites

You activated the integration component and maintained your RFC destination. If you use the same system, select *None*.

Features

Revenue Accounting Item Settings

You activate revenue accounting for sales order items based on these:

- *Sales Organization*
- *Sales Document Type*
- *Sales Document Item Category*
- *Distribution Channel*
- *Division*
- *Company Code to be Billed*
- *Material Number*

Condition type values and standard fields are passed to revenue accounting for active sales order items.

Program Enhancements

Standard Fields

You change the following standard fields with a business add-in:

- *Start Date*
- *End Date*
- *Inception Date*
- *Reference Type*
- *Reference ID*

> **Note**
>
> Items with the same reference type and reference ID are bundled into one revenue accounting contract. By default, the reference ID is filled with the sales order number.

Customer Fields

You may add fields that aren't standard and then they are passed to revenue accounting.

More Information

For more information, see Customizing under *Revenue Accounting and Reporting*.

3.2 Integration with SAP Billing and Revenue Innovation Management

Use

You can connect SAP Billing and Revenue Innovation Management (BRIM) with Revenue Accounting. SAP provides the sender component `CA` (SAP O2C) with Revenue Accounting.

If you have integrated SAP Customer Relationship Management (SAP CRM), SAP Convergent Invoicing (in SAP ERP) and SAP Convergent Charging (SAP CC) in the Offer-to-Cash end-to-end process, the integration with Revenue Accounting takes place solely by means of the ERP system. The ERP system transfers all necessary data to Revenue Accounting.

Prerequisites

The prerequisites for this integration are:

- You are using Contract Accounts Receivable and Payable (FI-CA) as part of one of the following industry components, and you are using SAP Convergent Invoicing and provider contracts:
  - Contract Accounts Receivable and Payable
  - Telecommunications
  - Utilities
- If you are using SAP Customer Relationship Management, you have activated business function `CRM_PROVORDERINT_3_9` (Integration of SAP CC and SAP CI with Provider Order for EHP3 SP09).
- You have activated the business function `FICA_EHP7_RA` (Integration with Revenue Accounting) (in SAP ERP).

Activities

To set up the integration, you make the following system settings in Customizing for Revenue Accounting under *Inbound Processing*:

1. Under *Revenue Accounting Item Management*, define logical systems and assign them to sender component `CA` (SAP O2C) in the *Define Sender Components* IMG activity.
2. Under *Revenue Accounting Items* create revenue accounting item classes `CA01`, `CA02`, and `CA03`, and generate them.
   The technical names are set by SAP. This ensures that the system automatically provides the required settings for each class when it is generated.
   The revenue accounting item class `CA01` defines the technical properties of order items. Class `CA02` defines the technical properties of fulfillment items, and class `CA03` defines those of invoice items.

You then activate the integration with Revenue Accounting and configure the RFC destination to the revenue accounting system, meaning the system, in which SAP Revenue Accounting and Reporting is running, in Customizing for Contract Accounts Receivable and Payable.

More Information

Also see the information on integration in the documentation of Contract Accounts Receivable and Payable under *Integration* > *Revenue Accounting* and the documentation of business functions `CRM_PROVORDERINT_3_9` and `FICA_EHP7_RA`.

3.3 Integration of External Sender Components

For information about connecting to external sender components, see SAP Note 2196907.

4 Inbound Processing

Revenue accounting receives operative data from the components integrated with it (orders, invoices and order fullfullments, such as goods issues) and stores this in the form of Revenue Accounting Items [page 28]. The technical properties of the revenue accounting items are determined by the Revenue Accounting Item Classes [page 29]. You define these technical properties by undertaking the Configuration of Revenue Accounting Item Classes [page 29]. You process revenue accounting items for revenue accounting contracts, performance obligations, and order fulfillments. The status of a revenue accounting item reflects its processing status. You can monitor this centrally.

In Customizing of Revenue Accounting under *Inbound Processing* > *Revenue Accounting Item Management* > *Define Program Enhancements*, there are business add-ins available that enable you to influence inbound processing. Here you can:

- Enrich and check revenue accounting items before these are created with the status *Raw*
- Enrich and check revenue accounting items if these are transferred to the status *Processable*
- Determine a revenue accounting ID for every revenue accounting item, in order to group all items that belong together.

4.1 Basic Concepts of Inbound Processing

The following sections give you an overview of the concepts and parameters:

- That define and control inbound processing
- With which you can design the processes and adjust them to your requirements

In addition to the most important concepts, the following sections also explain the usage of the individual elements, and the settings in Customizing are discussed.

4.1.1 Revenue Accounting Item

Revenue recognition-relevant transactions result in the creation of revenue accounting items. Revenue accounting items contain source information about these transactions that result in the creation of revenue accounting contracts, performance obligations, and order fulfillment in Revenue Accounting.

The class for revenue accounting items [page 29] determines the technical properties of revenue accounting items.

The following statuses are possible for a revenue accounting item:

- *Raw*
- *Processable*
- *Processed*

The various statuses of revenue accounting items are reflected on a technical level using different database tables. For each status and revenue accounting item class, there are two database tables one for main items and one for conditions (one for each record type).

4.1.2 Class for Revenue Accounting Items

The class for revenue accounting items determines the technical properties of a revenue accounting item. These technical properties include:

- Basic fields delivered by SAP that you have added by selecting interface components
- Customer-specific fields that you have added by selecting customer fields
- Database tables, in which the system stores the revenue accounting items based on their status
- Function modules (RFC-enabled) that receive revenue accounting items
- Function modules that save the revenue accounting items in the appropriate database tables

4.2 Configuration of Revenue Accounting Item Classes

Use

By configuring revenue accounting item classes, you specify the technical properties that suit your needs for revenue accounting items. The settings determine the structures of the database tables as well as the interfaces for the data transfer.

Prerequisites

To be able to select customer fields in a class, you must fill the corresponding enhancement includes. For more information, see Customer Fields in Revenue Accounting Item Classes [page 32].

Process

You create and configure new classes in Customizing of Revenue Accounting under *Inbound Processing* > *Revenue Accounting Items* > *Maintain Revenue Accounting Item Class*.

Once you have completely defined a revenue accounting item class and set the configuration and activation status, you generate the interfaces (see Interface Generation [page 33]).

You configure revenue accounting item classes in the following steps:

1. Selecting interface components

SAP supplies interface components that you can activate for each class. There are interface components for which particular class types are mandatory. The system automatically activates them depending on which class type you choose.

2. Selecting customer fields
   You can include customer-defined fields in the interface and data store.
3. Administering indexes for database tables

   To optimize performance, you can choose the pushbutton  to create your own indexes in database tables. The customer fields and also the fields of the active interface components are available for use in the index fields.
4. Display table structure

   You can display the structure for revenue accounting items by choosing the  pushbutton.
5. Changing the configuration status
   After creation, the class has the configuration status *In Processing*. You can change a class with this status as you like. If you activate the class, the system does not include it in a transport order. The system is only able to include the class in a transport request if you have set the status to *Transportable*. You can also make as many changes as you like in this status. When you set the configuration status to *Released as Productive*, you can only make the following compatible changes:
   - Selecting additional interface components that are not yet active
   - Selecting additional customer fields that are not yet active
   - Creating, displaying, and changing indexes

   > **Note**
   >
   > Remember that this can result in conversions of table content already present.
6. Activating the configuration
   You can only activate a class if it is thoroughly consistent. In particular, this means that it must be without errors.
   At a given time, there can only ever be one active version of a revenue accounting item class. If you make changes to the active version of a class without activating it, the system creates a working version in addition to the active version. When you activate the configuration, the working version becomes the active version. You can also return to the last active version of the configuration from the working version. To determine differences between the working version and the active version, you can compare these versions.
   When you activate the configuration, the system checks the completeness of the work structures for revenue accounting items used in the processing programs. The system can then automatically add fields of the class that are are not already contained in the work structures. These fields are added in the related customer includes of the work structures.
   As soon as there is a class with the *Productive* configuration status, the system writes a history of the active versions. This allows you to track when changes were made to the configuration. If you activate a class with the configuration status *Transportable* or *Released as Productive*, the system creates a transport request for the class, with which you can transport the active status of the class to follow-on systems. You can also decide if the class is automatically generated in the target system. When it is transported to the target system, the revenue item class is then automatically generated by the after-import method `FARR_RAIC_GEN_AFTER_IMP`.
   You can only generate classes if the customer includes have the same status in the source and target system.

> ⚠ Caution
>
> When you update the profitability analysis and transfer the characteristics for the derivation of the profitability segment `COPA_MI01`, the structure of the characteristics for profitability analysis (`COPACRIT`) have to be identical in the Customizing system and target system.

4.2.1 System Landscape

The configuration and generation of revenue accounting item classes are based on a three-level system landscape as can be seen in the following figure.

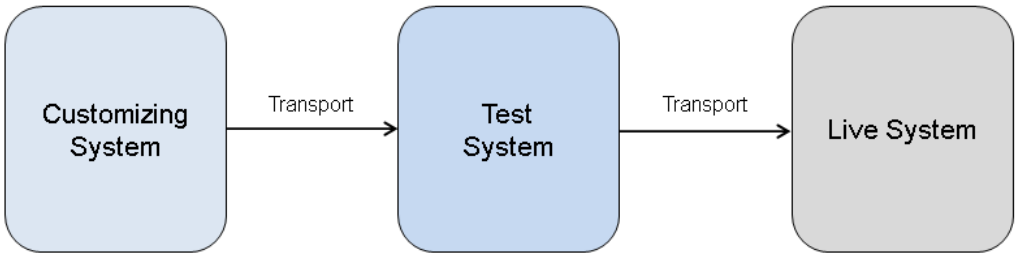

Figure 1: System landscape structure

You configure your revenue accounting item classes in your Customizing system. The system saves the configuration as Customizing data. You can transport this Customizing data into a test system as soon as you change the status of the configuration to *Transportable*. The transport connection is integrated in the transaction for the configuration of revenue accounting item classes in the standard system. The system ensures that only complete and consistent configurations are transported. Use transport object `FARR_RAI_CONF` for the transport.

Taking the transported Customizing data as a basis, you can generate the corresponding workbench objects (such as RFC function modules for the data transfer and database tables for data storage) for the classes in the test system. Then you can test the classes with test data.

Once you have successfully concluded your tests, you can transport the Customizing data to the production system to generate objects for the classes there.

> ⚠ Caution
>
> You can change the configuration of revenue accounting item classes. This gives you the option of regenerating workbench objects for classes in the test and production system.
>
> However, as soon as you wish to use a class in the production system for production data, you should set the configuration status for the class to *Released as Productive* in the Customizing system. This status only permits compatible changes to the configuration of the class in the Customizing system. This means that you are allowed to insert a new field in the table for example, however, you are not allowed to delete fields. During the regeneration in the production system, this ensures that no production data is lost.

4.2.2 Interfaces for Revenue Accounting Item Classes

The system generates a separate RFC function module for every revenue accounting item class. With this RFC function module, you transfer revenue accounting items for a class to Revenue Accounting (FI-RA). The naming convention for the function modules is `/1RA/xxxx_RAI_CREATE_API`, where `xxxx` stands for the four-character name of the class.

The generated RFC function module is adapted to the structure of the revenue accounting item class with its parameters.

In the standard system, a `COMMIT WORK` (or `ROLLBACK WORK` in the case of an error) occurs every time the RFC function module is called. This means that every RFC function module represents a logical unit of work (LUW) as standard. You can override this in the `IV_TEST` parameter. See the documentation in the system.

If the RFC function module is called, the system writes an application log for the processing of the transferred revenue accounting items. You can display this application log with the transaction `SLG1` for the object `FARR` and the subobject `CREATE`.

> ⚠ Caution
>
> When you update the profitability analysis and transfer the characteristics for the derivation of the profitability segment `COPA_MI01`, the structure of the characteristics for profitability analysis (`COPACRIT`) have to be identical in the Customizing system and target system.

4.2.3 Customer Fields in Revenue Accounting Item Classes

Use

You can include customer-specific fields in the interface and data store of revenue accounting item classes.

Activities

For you to be able to use customer fields when configuring revenue item classes, you have to add these fields to one of the following enhancement includes:

- `INCL_EEW_FARR_ARL`
  This include is used for fields that are only used in revenue accounting items.
- `INCL_EEW_FARR_POB`
  This include is used for fields that are also needed in the performance obligations in contract management.
- `INCL_EEW_FARR_REP`
  This include is used for fields that you also want to use in evaluations.

> ℹ Note
>
> To ensure that customer fields are taken into account during the processing of revenue accounting items, the system checks the completeness of the work structures when the configuration of the revenue accounting item

class is activated. The system automatically adds any missing customer fields to these structures. These fields are added in the related Customer include of the work structure.

When you add customer fields to a revenue accounting item class, please note that the system only passes on fields of the order item class type to contract management. As a consequence, you can only use fields of this class type for reporting.

Customer fields of the fulfillment item and invoice item class types are not passed on to contract management and cannot be used for reporting.

When you add fields of these class types to a revenue accounting item class, you can only use them for customer-specific changes and checks during the creation and transfer of revenue accounting items.

4.2.4 Interface Generation

Use

From revenue accounting item classes, you generate the interfaces for the transfer of revenue accounting items as well as the data storage for the revenue accounting items.

Prerequisites

You have configured classes and activated their configuration in Customizing activity *Maintain Revenue Accounting Item Class* under *Inbound Processing* > *Revenue Accounting Items*. In order to be able to generate interfaces for a revenue accounting item class, the configuration of the class must be active.

Features

You generate intefaces for revenue accounting item classes in Customizing of revenue accounting under *Inbound Processing* > *Revenue Accounting Items* > *Generate Interfaces for Revenue Accounting Item Classes*.

In order to generate the interface and data storage for a revenue accounting item class, you select the class in the list and choose the pushbutton in the toolbar. Generation is possible when a corresponding generation status exists.

> **Note**
>
> During generation, the system deletes existing generated objects if necessary. That means that you can lose the data. The system behavior is according to the configuration status of the class:
>
> - *In Processing*
>   You can choose whether to delete existing objects and generate them again, or whether to retain existing data. In the first case, you lose the data.

- *Transportable*
  You can choose whether to delete existing objects and generate them again, or whether to retain existing data. In the first case, you lose the data.
- *Released as Productive*
  If you generate a class for the first time in the *Released as Productive* status, the system deletes all existing objects and regenerates them. You lose data in this case.
  For all other generations for a class in the *Released as Productive* status, the system only regenerates objects that either did not yet exist or that need to be adjusted. All of the data that existed up to that point remains.

The technical names of all generated objects begin with `/1RA/` and contain the technical name of the revenue accounting item class that they relate to. You can display the complete object names for a revenue accounting item class in transaction `FARR_RAI_GEN` under *Generated Objects* (or using the service function module `FARR_RAI_GEN_OBJNAMES`).

In the context of generation, the following functions are available in the toolbar. In order to use one of the functions, select a revenue accounting item class and choose a pushbutton:

- Checking generation
  When you call up the transaction, the system checks the entries that were already made in the configuration, including additions to interface components, customer fields, and indexes. A detailed comparison based on changes of the generated function modules only occurs if you explicitly check the generation by choosing the  pushbutton.
- Deleting generated objects
  If objects already exist and the configuration status of the interface is not *Released as Productive*, you can delete these objects. To do so, choose the  pushbutton.
- Displaying generated objects
  In order to display generated objects and to navigate to the objects, select the pushbutton .
- Displaying the generation history
  The generation history provides an overview of the executed generations. You can display the respective generation log and the generated configuration for a generation. To do so, choose the pushbutton .
- Displaying the generation log
  The generation log shows the activities that the system executed during the generation. Call up the log using the pushbutton .
- Displaying the generated configuration
  Using the pushbutton , you can display the configuration of the class that you most recently generated.
- Compare configuration generated with the active version
  By choosing the pushbutton , you can compare the configuration version of the class with the current active version. You receive a detailed list of the differences for each status and record type. The system also shows whether the generated function modules would have been changed in the case of new generation.
- Releasing and locking classes for use
  You use the release status of the interface of a class to control whether data for this class can or cannot be transferred. The following statuses are possible:
  - __ Not released for use
  - 
    A class can only contain this status if its configuration has also been released for productive use.

- 
  A class can contain this status in the development or test system only if the status of the configuration is *In Processing* or *Transportable*. This gives you the option of testing a class in advance.

If you execute generation for a revenue accounting item class, the interface is released for the transfer of revenue accounting items by default. If you would like to temporarily lock the transfer of revenue accounting items for a class on a technical basis, choose the pushbutton . If you want the class to be available again for data transfer, choose the pushbutton .

4.3 Adding Accounts to Revenue Accounting Items

Use

If a sender component transfers reference accounts in order items and invoice items, Revenue Accounting determines the target accounts for posting based on Customizing rules (for example, for posting recognized revenues or for receivables adjustments) as described under “Revenue Posting” in Account Determination [page 119].

If the sender components do not transfer any G/L accounts with the operative data, then Revenue Accounting determines the G/L accounts for posting order items by using Customizing rules from the transferred revenue accounting items. The system derives the G/L accounts for fulfillment items and invoice items using the reference to the order item.

To derive the G/L accounts from characteristics of order items, the sender system has to set the *Determine Revenue Accounts with BRFplus* indicator in main conditions. The sender system must also set the *Determine P+L Accounts with BRFplus* indicator in condition records.

If these indicators are set, then the system derives the G/L accounts during the processing of order items in a separate step that comes before the account determination when a G/L account is already entered. After that, the system processes the enriched items exactly as if the sender system had transferred them with G/L accounts.

You define in Customizing for each revenue accounting item class which characteristics Revenue Accounting uses to derive which G/L accounts.

The system derives the G/L accounts for fulfillment items and invoice items using the reference to the order item.

Activities

To derive G/L accounts from order items:

1. Enter the derivation rules for G/L accounts in Customizing for Revenue Accounting under *Inbound Processing* > *Revenue Accounting Item Management* > *Assign BRFplus Applications to Revenue Accounting Item Classes*, by assigning BRFplus applications to the revenue accounting item class of the *Order Item* class type.

2. For each order item class, enter an ABAP structure that references the BRFplus application. In Customizing for Revenue Accounting, choose *Inbound Processing* > *Revenue Accounting Item Management* > *Maintain BRFplus Structure*.
   In this way, you can derive the G/L accounts from any characteristics of order items.

> **Note**
>
> If you want to derive G/L accounts based on customer fields, you have to define the BRFplus structure first in Customizing. Then you can add the fields to the revenue accounting item class and generate the class. Once this is done, the fields are available when you define your BRFplus application.

The function is available both in mass processing for revenue accounting items (transaction `FARR_RAI_PROC`) and in the monitor for revenue accounting items (transaction `FARR_RAI_MON`), when you choose .

4.4 Changing of Raw Data and Error Handling

Use

In the monitor for revenue accounting items, you can do the following in case of error:

- Manually change the contents of individual fields
- Use mass change to manually change multiple field values for multiple items at the same time

Prerequisites

You have specified which fields can be changed in Customizing for Revenue Accounting under *Inbound Processing* > *Revenue Accounting Items* > *Define Modifiable Fields for Revenue Accounting Items*. (In the standard system, you are not permitted to modify any fields.)

You need authorization for authorization object `F_RRRAIADM`.

Features

If you change values for a raw data item, the system updates the change history. In the change history, all item changes are listed chronologically.

Activities

To change billable items and resolve errors, choose transaction `FARR_RAI_MON` (*Display of Revenue Accounting Items*).

For more information, see the program documentation.

4.5 Transfer of Revenue Accounting Items to Processable Status

Use

For the processing of revenue accounting items to be able to start, the items delivered must have the status *Processable*.

Features

During the transfer the system checks the items contained in the sales order of a sender component. If the check is successful, the system saves the items as processable items. If the check finds an error, the items remain in the raw data. The system checks all the items of a sales order document (`HEADER_ID`) in a logical unit. An error in one item causes the check to terminate for all the other items in the document.

During the transfer of data from feeder systems, the system normally stores the data as processable items in revenue accounting. Then you can process these items. However, for the following reasons, the system first saves the data as raw data:

- In Customizing for the upload rule, you specified that the items are to be added as raw data (see Customizing for Revenue Accounting under *Inbound Processing* > *Revenue Accounting Items* > *Assign Upload Rules to Revenue Accounting Item Classes*).
- The system was unable to check some of the field values or determine them uniquely. The item was added to the raw data as a result. Possible reasons for this:
  - The company code, the currency or the reference type is not known.
  - The assigned order item could not be determined for a delivery or invoice item. The order item must have already been saved as *Processable*.
  - The sales organization, distribution channel, division, item category, material number or plant could not be determined for the integration with an SD system.

Activities

To transfer raw data to the processable status, you have two options:

- Mass Processing
  1. For the transfer of mass data, choose transaction `FARR_RAI_TRANS` (*Transfer Revenue Accounting Items*).
  2. Make your selection under *Selection Data*.
  3. Schedule the program run. Choose .

  The system transfers the items matching the selection from the status *Raw* to the status *Processable*.

  > **Note**
  >
  > The parallel processing is based on the subarea (`KEYPP`). This makes sure that the system transfers all of the revenue accounting items of an order for a sender component together in the same interval.
  >
  > When transferring items from sales orders to the status *Processable*, the system determines the subarea for the parallel processing based on the reference.
  >
  > When transferring delivery and invoice items to the status *Processable*, the system determines the items assigned in the sales order first. The system derives the subarea for the parallel processing from the order item.

- Dialog Processing
  You can transfer individual items manually in transaction `FARR_RAI_MON` (*Display of Revenue Accounting Items*), see Displaying Revenue Accounting Items [page 45].

4.6 Processing Revenue Accounting Items

Use

You use transaction *Process Revenue Accounting Items* (`FARR_RAI_PROC`) to process large volumes of data in parallel.

Schedule the program run at regular intervals, at least once for each period, but not more often than is really necessary. If you schedule the program run more frequently, you increase the workload on the subsequent process, as the following example illustrates.

> **Example**
>
> 1. You create the order item 4711 on January 1.
> 2. On January 2, you change the order item for the first time.
> 3. On January 3, you change the order item again.
>
> You transfer the order items on a daily basis.
>
> Both when you create and each time you change the order item, the sender system generates a separate revenue accounting item.

However, revenue accounting only ever processes the most current revenue accounting item.

If you carry out processing daily, revenue accounting processes all of the items generated. If you carry out processing only on January 4, the program discards the revenue accounting items generated on January 1 and 2, and only processes the most current item from January 3.

Features

The program selects the revenue accounting items present in the system with status *Processable*, and transfers these to the status *Processed*.

Activities

Specify the required company code and start the program direct using , or else schedule the program run.

If you choose the *Job Distrib.* pushbutton, you can distribute the load explicitly to server groups.

4.6.1 BRFplus Functions Executed During Processing

Use

SAP delivers the following BRFplus application templates:

- `FARR_AP_SD_PROCESS_TEMPLATE`
  You use this template for revenue accounting item classes used for the integration with Sales and Distribution (SD).
- `FARR_AP_CA_PROCESS_TEMPLATE`
  You use this template for revenue accounting item classes used for the integration of SAP Hybris Billing (sender component `CA`).
- `FARR_AP_PROCESS_TEMPLATE`
  You use this template for revenue accounting item classes used for the integration of any other sender component.

You create your own BRFplus application by copying the appropriate template application delivered by SAP. You implement your installation-specific logic by maintaining the appropriate decision table entries or adapting the rule sets in your copy. You can find more detailed information about creating and modifying BRFplus applications and functions under *help.sap.com* > *Technology Platform* > *SAP NetWeaver* > *SAP NetWeaver 7.0 EHP2* > *Application Help* > *Function-Oriented View (English)* > *Application Platform by Key Capability* > *Business Services* > *Business Rule Framework plus (BRFplus)*.

⚠ Caution

To make sure that the consistency of system data is not compromised, you have to consider some restrictions during the implementation of BRFplus functions. You are not allowed to use one of the following language elements or perform the following actions:

- `COMMIT WORK`
- `ROLLBACK WORK`
- `CALL FUNCTION 'DEQUEUE ALL'`
- Deletion of locks that you have not set yourself
- Implicit database commits triggered by RFC calls or by a `MESSAGE` or `WAIT` statement

Each template includes BRFplus functions that the system executes during the processing of revenue accounting items.

⚠ Caution

When you copy an application template, do not change the names of the BRFplus functions provided with the template.

The system executes the following BRFplus functions once for each revenue accounting item:

Table 15:

BRFplus Function	The function is used to determine:
`FC_RAI_AD_REC_ACCOUNT`	The receivables account This function is executed once for each order item. If a receivables account can be determined, the account is stored in the processed revenue accounting item as well as in the related performance obligation(s). If no receivables account can be determined, the system tries to determine the receivables account using the customer. If this option does not yield any result either, the revenue accounting item cannot be processed and remains in status *Processable*.
`FC_RAI_AD_ACCOUNT_ASSIGNMENT`	Account assignments, such as business area, profit center, segment, functional area This function is executed once for each order item. The account assignments that are determined are stored in the processed revenue accounting item, as well as in the related performance obligation(s).

BRFplus Function	The function is used to determine:
FC_RAI_AD_REV_ACCOUNT	The revenue account This function is executed once for each non-statistical price condition of an order item. If a revenue account can be determined, this revenue account is stored in the processed revenue accounting item. If no revenue account can be determined, the revenue accounting item cannot be processed and remains in status *Processable*.
FC_RAI_AD_COS_ACCOUNT	The cost account This function is executed once for each non-statistical cost condition of an order item. If a cost account can be determined, this cost account is stored in the processed revenue accounting item. If no cost account can be determined, the revenue accounting item cannot be processed and remains in status *Processable*.
FC_RAI_EST_QUAN_DET	The estimated quantity and price per unit This function is executed once for each main price condition of an order item. If an estimated quantity and price per unit can be determined, this information is stored in the processed revenue accounting item. The quantity is stored in the main item. The price (estimated quantity x price per unit) is stored in the main price condition. If either the estimated quantity or the price per unit cannot be determined, the revenue accounting item cannot be processed and remains in status *Processable*.

The system executes the following BRFplus functions once for each revenue accounting item and accounting principle. The values determined are not stored in the revenue accounting items.

In Customizing for Revenue Accounting under ▶ *Revenue Accounting Contracts* ▶ *Define Performance Obligation Types* ▶ you can also define the default attributes of a performance obligation type. If no attributes are derived in BRFplus functions, they are filled with these default attributes.

Table 16:

BRFplus Function	The function is used to derive:
FC_PROCESS_COMPOUND	Compound Group Component The compound group component determines whether non-bills of material are managed as distinct or non-distinct performance obligations. This function is executed for order items which are non-bills of material.
FC_PROCESS_BOM	This function determines whether bills of material are managed as distinct or non-distinct performance obligations. This function is executed for order items which are bills of material.
FC_PROCESS_POB	This function contains several components, including, but not limited to, the following: • Performance obligation name • Performance obligation type • Residual performance obligation • Fulfillment type • Event type • Start and end dates • Status
FC_PROCESS_POB_ADD	Links to implicit performance obligations. This function is executed for order items.
FC_PROCESS_SSP	Standalone Selling Price (SSP) The standalone selling price can either be determined in BRFplus or you can send it with special conditions from the operational application. This function contains the following components: • SSP • Tolerance range • Calculation type This function is executed for order items.
FC_PROCESS_DEFERRAL (defferrals)	Additional performance obligations from defined special condition types (for example, right of return). This function contains the following components: • Category • Method • Percentage • Duration • Event type • Fulfillment type • Start and end dates

BRFplus Function	The function is used to derive:
FC_PROCESS_HEADER	Contract header attributes, such as contract category and description. This function is executed for order items.

Activities

In Customizing for *Revenue Accounting* under *Inbound Processing* > *Revenue Accounting Item Management*:

1. Assign your BRFplus application (copy) to your revenue accounting item classes.
2. Maintain the structures that are used in BRFplus functions as input structures (activity *Maintain BRFplus Structure*).
   When you generate interfaces for revenue accounting item classes (using transaction FARR_RAI_GEN), the installation-specific fields you appended to your revenue accounting item classes are automatically appended to the BRFplus structures that you enter in this Customizing activity. This means that you can easily make installation-specific fields available as input parameters in BRFplus.

4.6.2 Determining Quantities and Amounts

Use

Sender systems can transfer revenue accounting items that do not contain a quantity and do not contain an amount. In that case, Revenue Accounting determines quantities and amounts when it processes revenue accounting items.

For determining quantities and amounts (prices) per unit, SAP provides the BRFplus function FC_RAI_EST_QUAN_DET. The system processes this BRFplus function during processing.

Example

You provide services to customers.

The performance obligation is consumption-based.

The price of the performance obligation depends on how many units the customer consumes until the duration of the performance obligation ends.

Based on the data transferred in the revenue accounting items, you use the BRFplus function FC_RAI_EST_QUAN_DET to estimate the amount consumed and to determine the average price per unit of measure.

The amount of the performance obligation is determined by multiplying the estimated quantity by the average price per unit.

The function is available both in mass processing for revenue accounting items (transaction FARR_RAI_PROC) and in the monitor for revenue accounting items (transaction FARR_RAI_MON), when you choose .

4.6.3 Generating Planned Invoices

Use

During processing of revenue accounting items, you can automatically generate invoices for items of a billing plan. For this to take place, the sender system has to fill the *Invoice Category* attribute on the invoice items accordingly.

In Revenue Accounting, the total amount and total quantity of billing plans are represented by an order item that is valid for the entire duration of the payment plan. In addition to this, information about the due dates and amounts of the billing plan is stored in invoice items. If a payment plan date is invoiced, then the sender system has to forward an additional invoice item with the billing document data to Revenue Accounting.

You can also generate the actual invoice items in Revenue Accounting. This is to support scenarios in which actual invoicing usually corresponds to the billing plan, and therefore you do not want to connect the billing system to Revenue Accounting (or it might not be possible).

If you want the system to generate an actual invoice from a planned invoice item of a billing plan on the posting date, then the invoice must have invoice category 2. In addition, the *Invoice Corrections from Billing Plan* (BILLING_PLAN_INV) indicator has to be set on the order item of the billing plan. In that case, the system does not transfer any invoice items for revenue accounting items with *Processed* status. The system reports an error.

Invoice items of invoice category 2 keep the status *Processable* until their posting date is reached. If they are processed after their posting date has been reached, then actual invoices are created from them. These invoices then result in postings. When the actual invoice items are generated, the values in foreign currency are updated.

You can change invoice items of invoice category 2 until their posting date is reached. After the posting date is reached, changes are no longer possible, since it could be the case that postings were already made based on this data. Therefore, after the posting date is reached, you have to reverse these invoices and create new ones to make a change, the same as you would for actual invoices.

The function is available both in mass processing for revenue accounting items (transaction FARR_RAI_PROC) and in the monitor for revenue accounting items (transaction FARR_RAI_MON), when you choose .

4.6.4 Processing of Order Items with Predecessor Items

Order items have the following fields as references to their predecessor items:

- Predecessor Item Sender Component
- Logical System of the Predecessor Item
- Predecessor Item Type
- Predecessor Item ID

The fields are contained in interface component BASIC_MI01 and are therefore available in all order items.

If an order item is related to a predecessor item, the system does not treat the order item as a separate and independent item. Instead the system aggregates the quantities and amounts of the order item with those of the

predecessor item when the item is being processed. When the revenue is posted, the system treats the aggregated data as a change to the predecessor item.

Multiple revenue accounting items are allowed to refer to the same predecessor item. However, the total quantity and total amount are not allowed to take on a negative value after all the items are aggregated.

Each of the items and its predecessor item must have the same company code, currencies, units of measure, and setting for its value relevance.

The following example illustrates how the fields are used during processing of order items, based on a return in Sales and Distribution (SD).

Example

1. A customer orders three televisions for 500 each.
2. Revenue Accounting creates a revenue accounting item for this order with a quantity of 3 and an amount of 1500, and generates the revenue postings.
3. One of the televisions is damaged in transport.
4. Revenue Accounting creates an additional order item with a quantity of -1 and an amount of -500. This item refers to the original (predecessor) order item.
5. Revenue Accounting offsets the item for the return against the original order item.
6. When the revenue posting is made, the system takes the change of the original order item into account with a newly calculated quantity of 2 and an amount of 1000.

4.7 Displaying Revenue Accounting Items

Use

Using transaction `FARR_RAI_MON`, you can display, analyze, and process revenue accounting items based on your selection criteria, regardless of their processing status.

Features

You can restrict the selection to order items, fulfillment items, invoice items, or all items belonging to order items and their item status.

The system displays the revenue accounting items that match your selection criteria in the form of an ALV list. You can use the following functions in the list:

Table 17:

Pushbutton	Choose the pushbutton to

	Transfer revenue accounting items from status *Raw* to status *Processable*
	Simulate the transfer of revenue accounting items from status *Raw* to status *Processable*
	Process revenue accounting items in status *Processable* By being processed, the items receive the status *Processed*.
	Process items from the initial load with field value 1 in the `INITIAL_LOAD` field (*initial load due to a new company code or migration package*) **Note** Items that were generated by an initial load due to a new company code or migration package can only be processed if you choose . All other items can be processed only by choosing the *Process* pushbutton.
	Make emergency corrections **Note** To be able to make changes, you require the special authorization for authorization object `F_RRRAIADM`. The change is updated in a history that you display in the list by choosing the  pushbutton.

Note

The following transactions are provided for processing mass data:

- *Initial Load: Process Revenue Accounting Items* (`FARR_RAI_PROC_LOAD`)
- *Transfer Revenue Accounting Items* (`FARR_RAI_TRANS`) (see Transfer of Revenue Accounting Items to Processable Status [page 37])
- *Process Revenue Accounting Items* (`FARR_RAI_PROC`) (see Processing Revenue Accounting Items [page 38])

Displaying Legacy Data

On the initial screen, you can specify in your personal settings that the monitor also displays legacy data (from previous systems). Choose the  pushbutton, and select one of the following settings:

- No Legacy Data
  This is the default setting. The monitor does not select any legacy data, if you choose this setting.
- Allow Display of Legacy Data in Item Display

If you choose this setting, the monitor does not select legacy data automatically. However, if you choose the *(+) Legacy Data* (*Display Legacy Data*) pushbutton in the item list, you can show legacy data.

- Always Display Legacy Data
  If you choose this setting, the monitor always selects legacy data. You can hide the legacy data by choosing the *(-) Legacy Data* (*Hide Legacy Data*) pushbutton in the item list.

The system saves your settings in the `FARR_MON_SEL` user parameter and uses them the next time you call the monitor.

If you display legacy data, the monitor shows a new tab for each of the following: legacy data for main items, legacy data for condition items, and legacy data for planned fulfillment items.

For more information, see the program documentation.

4.8 Reconciliation of Revenue Accounting Items with Contracts

Use

You can use transaction `FARR_RAI_RECON` to check for data inconsistencies between revenue accounting items and revenue accounting contracts. You do so by reconciling the processed revenue accounting items with the determined performance obligations.

During this reconciliation, the system checks if the amounts and quantities are the same in both. If the program determines there are differences in the quantity or amount, the system saves these performance obligations. The next time a reconciliation is performed, the program checks these saved performance obligations first.

The report parallelizes the selected data during processing. You specify the number of jobs that can be executed in parallel in SAP Customizing under *Cross-Application Components* > *General Application Functions* > *Parallel Processing and Job Control* > *Parallel Processing* > *Maintain Job Distribution*.

For more information, see the program documentation.

More Information

Also see RAI Reconciliation with non-SAP Sender Components [page 220].

4.9 BRFplus Simplified User Interface

Definition

The BRFplus simplified user interface (UI) is an alternative to the standard BRFplus UI. You use the simplified BRFplus UI to maintain decision tables used in *Revenue Accounting and Reporting*.

Features

When you open the BRFplus simplified UI, a link to the available decision tables appears. You maintain the data of the decision table by clicking the link. The screen is divided into sections: the top displays the name and the mode of the decision table in which you are working as well as the search options for the decision fields of the table; the bottom shows the table data. Decision fields and result fields are in different colors, whereby green represents the result fields.

> **Note**
>
> The evaluation logic of BRFplus is row-based. When you use a decision table to evaluate some values, the first entry that matches your criterion is considered independent if a closer match exists further down the table. You place the most specific criteria at the top of the table and the less specific criteria further down.

In edit mode, you can do the following:

- Add new lines
- Delete lines
- Copy and paste lines
- Move lines up or down

You also have an option to navigate to related decision tables. The relationships are maintained in Customizing. If no relationship is maintained, the button isn't visible. When you choose the *Navigate to Related Decision Table* button, the values of the decision fields of the selected line are used as filters with which to call up the related decision table. When the decision fields are the same, the decision tables are maintained. If there's no match, all entries of the related decision table are shown.

Time Dependency is a special mode that maintains time-dependent entries. The *Time Dependency* and *Add Interval* buttons are visible if the decision table contains a decision field based on the data element `FARR_BRF_UI_EVALUATION_DATE`. After you select *Time Dependency*, all entries are sorted by the decision fields and then by the evaluation date, so you can maintain entries that differ by date.

The *Add Interval* button creates a new entry with the same values for the decision fields as the selected row. The system avoids gaps by proposing start and end dates when you insert a new line in an existing interval.

> **Note**
>
> SAP recommends that you maintain all entries in sequential rows if you have a time-dependent decision table.

5 Contract Management

5.1 Performance Obligations

A performance obligation represents the contractual commitment of an enterprise to deliver a good or a service to a customer in exchange for a consideration. A performance obligation usually corresponds to an item in an operational document, such as a sales order item. Therefore, a performance obligation is not necessarily a distinct performance obligation that stands on its own for revenue recognition.

5.1.1 Linked Performance Obligations

Use

Some items that your company promises to deliver to your customer may not be explicitly included in the operational document. However, you may want to include them in the revenue accounting contract. In this case, you can configure Revenue Accounting to add those implicitly promised items as linked performance obligations, and specify which is the "leading" item of these linked items.

To indicate a leading-linked relationship, you can use the following configuration:

- A performance obligation whose *Leading/Linked* attribute is set to *Leading*.
- One or more performance obligations whose *Leading/Linked* attribute is set to *Linked*.
- The "linked" performance obligations point to the "leading" performance obligation with the attribute *Leading Performance Obligation*.

Example

Your company promises to deliver a software product to a customer in exchange for a consideration. For each purchase, your company promises to deliver a technical service to make sure that the software is properly

deployed. It is an important part of your company's delivery, even though it is not explicitly listed as a line item in the sales order. In this case, the following performance obligations can be created to address this scenario:

Table 18:

Performance Obligation	Leading/Linked	Leading Performance Obligation	Sales Order Item
001 - Software	Leading	None	Software License
002 - Service	Linked	001 - Software	None

5.1.2 Performance Obligation Hierarchies

Performance obligations in a contract are organized in a hierarchy to represent their relationships with one another. The hierarchy can be considered a tree structure, if you think of the contract as a virtual root. A performance obligation can have other performance obligations as its lower-level items. This relationship can represent the following business scenarios:

- A bill-of-material structure
- A compound performance obligation that represents multiple non-distinct performance obligations

5.1.2.1 Sales Bill of Material Structures

You can use this feature to include bill of material (BOM) structures in a revenue accounting contract. When a sales representative creates a sales order, the sales order can include a sales BOM that represents both the finished product and its components. When the system creates a revenue accounting contract for the sales order, it can bring over the sales BOM structure. Consequently, the system organizes the performance obligations in the same structure as they appear in the sales order.

5.1.2.2 Compound Performance Obligations

Use

Certain items in a contract with your customer are not distinct items and cannot be posted separately for revenue recognition. These items are identified as non-distinct performance obligations and must be combined with other non-distinct items to form a distinct performance obligation. The performance obligation that results from the combination is called a compound performance obligation. The system supports non-distinct performance obligations with all fulfillment types, that is, event-based, time-based, and overtime.

> **Note**
>
> Overtime fulfilment usually occurs with project-related performance. The overtime performance is planned for a certain duration while the fulfilment of overtime performance obligation depends on Percentage of Completion (POC).

Example

Jolin's Software Ltd. sells business software. One of her best-selling products is an accounting tool. In a contract with a customer, Jolin's Software Ltd. promises to deliver a software license for 15 users and a maintenance service to make sure that the software is properly installed and running.

Neither the software nor the service can work on its own, so the accountant decides that the software and service are not distinct items. The software and service must be combined for revenue recognition even though they are separate items on the sales order created for the transaction.

In this case, the revenue accounting contract includes the following performance obligations:

- A non-distinct performance obligation that corresponds to the software license
- A non-distinct performance obligation that corresponds to the maintenance service
- A compound performance obligation that represents the combination of the two items

5.1.3 Manual Performance Obligations

Use

Some items that your company promises to deliver to your customer may not be explicitly included in the operational document. However, you may want to include them in the revenue accounting contract and allocate some of the transaction price to them. In this case, you can manually add performance obligations for these items.

Unlike a linked performance obligation, a manual performance obligation does not have a leading performance obligation. In the hierarchy of performance obligations, the manually added performance obligation is always added to the root of the structure.

Manual performance obligations do not correspond to any items in the sales order. Therefore, these manual performance obligations can only be fulfilled manually.

Activities

You can perform the following maintenance tasks for manual performance obligations:

- Add manual performance obligations

- Edit manual performance obligations
- Delete manual performance obligations

5.1.4 Deletion of Performance Obligations

Use

You can manually delete performance obligations from the operational system or a contract UI, but you cannot delete performance obligations created from operational documents. The system allows you to delete the following types of performance obligation:

- Linked performance obligations
  For more information, see Linked Performance Obligations [page 49].
- Manual performance obligations
  For more information, see Manual Performance Obligations [page 51].

Prerequisites

- There is no fulfilled performance obligation or invoiced performance obligation.
- All fulfilled performance obligations have been reversed.

Features

Types of Deletion

The system applies one of the following types of deletion when you delete performance obligations:

- Soft deletion
  With a soft deletion, the system marks the performance obligation as deleted so that it is no longer available for price allocation or fulfillment. In this case, fulfillments that have not been posted are deleted. The other fulfillments and deferral items are retained. The flags for all obligations, such as error, conflict, and block, are removed.
- Hard deletion
  With a hard deletion, the performance obligation is actually cleaned out of the system. All fulfillments, deferral items, deferrals, notes, and attachments are deleted.

The system follows the following rules when processing requests to delete performance obligations:

Table 19:

Scenario	Processing
A distinct performance obligation, regardless of whether it was manually created, is deleted.	• If postings have occurred for this performance obligation, the system applies a soft deletion. • If postings have not occurred for this performance obligation, the system applies a hard deletion.

A leading performance obligation is deleted.	• The system deletes the linked performance obligation as well.
	• Whether a soft deletion or a hard deletion is applied, the same type of deletion is applied to both the leading performance obligation and the linked performance obligation. Specifically, the following rules apply:
	  ○ If the linked performance obligation can only be soft-deleted (because postings occurred or for other reasons), then the system cannot hard-delete the leading performance obligation.
	  ○ If the leading performance obligation can only be soft-deleted (because postings already occurred), then the system cannot hard-delete the linked performance obligation.
	• If the leading performance obligation is deleted after the linked performance obligation is soft-deleted, both the leading and the linked performance obligations are hard-deleted.

A linked performance that was created by BRF+ rules is deleted.	If the leading performance obligation is not soft-deleted, and it is possible for the BRF+ rules to create a linked performance obligation again, then the system soft-deletes the performance obligation to prevent a new linked performance obligation from being created by the BRF+ rules.
A linked performance that was manually created is deleted.	• If postings have occurred for this performance obligation, the system applies a soft deletion. • If postings have not occurred for this performance obligation, the system applies a hard deletion.
A performance obligation that is a lower-level performance obligation in a BOM structure is deleted.	• If postings have occurred for this performance obligation, the system applies a soft deletion. • If postings have not occurred for this performance obligation, the system applies a hard deletion.

Scenario	Processing
A performance obligation that is a higher-level performance obligation in a BOM structure is deleted.	• The system ensures that all lower-level performance obligations are either soft-deleted or hard-deleted. • If lower-level performance obligations have been soft-deleted, then the higher-level performance obligation cannot be hard-deleted.
A performance obligation that is a lower-level performance obligation in a compound group (a "compound and non-distinct" structure) is deleted.	The system ensures that at least two lower-level (non-distinct) performance obligations remain in the structure.
A compound performance obligation that was created by BRF + rules is split.	The system soft-deletes the compound performance obligation.
A compound performance obligation that was manually created is split.	The system hard-deletes the compound performance obligation.
All lower-level performance obligations in a compound group (a "compound and non-distinct" structure) are deleted.	The entire structure is either soft-deleted or hard-deleted.

5.2 Revenue Accounting Contracts

A revenue accounting contract is an object that consists of performance obligations that belong together. It represents the financial view of an operational document, such as a sales order. A revenue accounting contract serves as a container for performance obligations. It typically represents an operational document that originates on the back-end operational system, such as a sales order created on a Sales and Distribution system. However, it can also represent an aggregate of multiple operational documents in certain business scenarios.

5.2.1 Contract Creation

When an operational document is created in the back-end operational system, the back-end system can request to create revenue accounting contracts.

5.2.2 Changes to Contracts

Use

Revenue accounting contracts and performance obligations can be changed after they have been created. Changes can be triggered following certain changes made to the operational documents. Additionally, users can also manually edit contracts and performance obligations.

Features

The system allows two types of changes to be made to contracts

- **Manual changes made by the accountant**
  The system allows you to perform manual tasks to change revenue accounting contracts after they have been created with default configurations.
- **Automatic changes requested by the back-end operational system**
  After creating a contract and its performance obligations, the back-end operational system can request more changes. For example, after renegotiating certain terms of the contract with the customer, a sales representative may change the price of the sales order. In this case, the back-end operational system can request a change to the revenue accounting contract, and the transaction price is reallocated.
- **Deletion of performance obligations**
  You can delete performance obligations. When you delete a performance obligation, depending on individual cases, the system may process the deletion as a "hard delete", where the object is removed directly, or as a "soft delete", where the object is only marked as deleted. For more information, see Deletion of Performance Obligations [page 52].

5.2.2.1 Manual Changes

Users can manually edit revenue accounting contracts and performance obligations after they have been created automatically at the request of the back-end operational system.

The manual changes supported address the following typical scenarios:

- **Edit performance obligation attributes**
  You can edit certain performance obligation attributes.
- **Add linked performance obligations**
  You can manually add linked performance obligations for items that are committed but are not included in the operational document.
- **Add manual performance obligations**
  You can add manual performance obligations for items that are committed but are not included in the operational document. Manual performance obligations do not point to other performance obligations as the leading performance obligation.
- **Change price allocation**
  You can change the default price allocation applied by the system.
- **Reorganize performance obligations in the contract**
  - **Split a compound performance obligation**
    You can split a compound performance obligation into several distinct performance obligations. When you perform this operation, the existing non-distinct performance obligations are converted into distinct performance obligations, and the existing compound performance obligation is removed.
  - **Merge distinct performance obligations**
    You can also merge multiple distinct performance obligations into a compound performance obligation. When you perform this operation, the existing distinct performance obligations are converted into non-distinct performance obligations, and a compound performance obligation is created.
- **Change the spreading for time-based performance obligations**
  You can change the default spreading applied by the system.

- **Add rights of return**
  You can manually add rights of return.
- **Edit the description of the contract**
  You can edit the description of the contract.
- **Move performance obligations across contracts**
  You can move performance obligations across contracts. The system allows you to restructure the performance obligations using cut and paste operations.
- **Move performance obligations within the contract**
  You can move performance obligations within the same contract. The system allows you to restructure the performance obligations using cut and paste operations.
- **Combine contracts**
  You can combine multiple contracts into one contract. The system allows you to restructure the performance obligations using cut and paste operations.
- **Delete performance obligations**
  You can delete performance obligations. When you delete a performance obligation, depending on individual cases, the system may process the deletion as a "hard delete", whereby the object is removed directly, or as a "soft delete", whereby the object is only marked as deleted. For more information, see Deletion of Performance Obligations [page 52].

5.2.2.1.1 Change Price Allocation

Proceed as follows:

1. In the NetWeaver Business Client, select a role that allows you to perform revenue accounting tasks.
2. Choose *Contract Management* > *Contract Search*.
3. Use the search function to find the contract for which you want to perform manual price allocation.
4. Select and open the contract and choose *Price Allocation* > *Change Allocated Amount*.
5. The *Allocated Amount* field displays the amount of the transaction price that is currently allocated to each performance obligation. In the *New Allocated Amount* field or the *Difference* field, you can change the value allocated to the performance obligation. If you update one field, the other field is updated automatically.
   - In the *New Allocated Amount* field, you can specify the amount that you want to allocate to the performance obligation.
   - In the *Difference* field, you can specify the differential amount that you want to add to or deduct from the current amount.
6. After you have changed the allocated transaction price, choose *Check Allocated Amount* or press enter to check the allocated amounts.
   - If the values in the *Transaction Price* and *Total Allocated Amount* fields are equal, the *Amount Not Allocated* entry is marked with a green traffic light. In this case, you have allocated the entire transaction price to the performance obligations in the contract.
   - If the values in the *Transaction Price* and *Total Allocated Amount* fields are **not** equal, the *Amount Not Allocated* entry is marked with a red traffic light. In this case, either you have not allocated the entire transaction price to the performance obligations, or the total amount that you have allocated to the performance obligations exceeds the total transaction price.
7. Choose *Save*.

5.2.2.1.2 Convert BOM-Structured Performance Obligations into a Compound Performance Obligation

Proceed as follows:

1. In the NetWeaver Business Client, select a role that allows you to perform revenue accounting tasks.
2. Choose *Contract Management* > *Contract Search*.
3. Use the search function to find the contract for which you want to merge distinct performance obligations.
4. Select and open the contract, and switch to the hierarchical view. The performance obligations that you want to merge must be part of a bill of material (BOM) structure.
5. Choose any performance obligation of the BOM structure, and then choose *Distinct <-> Non-Distinct*. After you apply this change, the higher-level performance obligation in the BOM structure is converted into a compound performance obligation that represents an aggregate of multiple non-distinct items. All lower-level performance obligations under the higher-level performance obligation are converted into non-distinct performance obligations.
6. Choose *Save*.

5.2.2.1.3 Change the Spreading for Time-Based Performance Obligations

Proceed as follows:

1. In the NetWeaver Business Client, select a role that allows you to perform revenue accounting tasks.
2. Choose *Contract Management* > *Contract Search*.
3. Use the search function to find the contract that includes the performance obligation for which you want to manually change the spreading.
4. Select and open the contract.
5. Select the time-based performance obligation and choose *Revenue Schedule*.
6. Select the performance obligation and choose *Change Spreading*.
7. The *Initial Revenue* field displays the revenue amount that is currently distributed to each accounting period. In the *New Revenue* field, you can change the value distributed to a specific accounting period.
8. After you have changed the revenue distributed, choose *Check Spreading* or press enter to check the spreading.
    - If the values in the *Total Revenue to Be Distributed* and *Total Revenue Distributed* fields are equal, the *Remaining* entry is marked with a green traffic light. In this case, you have distributed the entire revenue amount to the accounting periods.
    - If the values in the *Total Revenue to Be Distributed* and *Total Revenue Distributed* fields are **not** equal, the *Remaining* entry is marked with a red traffic light. In this case, either you have not distributed the entire revenue amount to the accounting periods, or the total amount that you have distributed to the accounting periods exceeds the total revenue.
9. Choose *Save*.

5.2.2.1.4 Move Performance Obligations

Proceed as follows:

1. In the NetWeaver Business Client, select a role that allows you to perform revenue accounting tasks.
2. Choose *Contract Management* > *Contract Search*.
3. Use the search function to find the contracts among which you want to move performance obligations.
4. Select the contracts and choose *Perform Contract Combination*.
5. In the Work Area, select the performance obligations or operational documents that you want to move, and then choose *Cut*. The cut operation marks the selected items so that they can be moved when you perform a paste operation. If the selection is on an operational document, all the performance obligations that are associated with this operational document are selected.
6. Select the contract to which you want to move the performance obligations that were selected in the previous cut operation, and choose *Paste*.
7. Choose *Simulate* to preview the new contract-level allocation effect that would occur if you save the change.
8. You can use the Search area to search for more contracts and add them to the Work Area and move performance obligations among them.
9. Choose *Save*.

5.2.2.2 Conflict Resolution

You can manually change certain fields of performance obligations after they have been created automatically. However, the back-end operational system may still request more changes to the performance obligations after the manual change. For example, this may occur when a change is made to the corresponding sales order. If you and the back-end system have changed the same attribute, a conflict occurs. In this case, the system puts the contract with conflicting changes in the *Contracts with Conflicts* worklist. You can review the list and resolve the conflicts.

The worklist displays conflicting changes in the following areas:

- *Changes Made to Attributes*
  The system lists the attributes that have conflicting changes. For each attribute, you can decide which version of the change is kept.
- *Changes Made to Price Allocation*
  If you have manually changed the price allocation and then the system has changed something relating to the price, you have to reapply your manual price allocation. This area tracks only changes made directly to the price allocation. Changes that have been made to other attributes and that may affect price allocation are always considered attribute changes instead of price allocation changes.
- *Added or Removed Performance Obligations*
  Items listed in this area do not require that you make any changes. Instead, the system only lists all added and removed performance obligations for your information.
- *Revenue Schedule*
  This area lists all the performance obligations in the contract, with a comparison of the old and new transaction prices. Additionally, it allows you to navigate to the revenue schedule user interface.

5.2.2.2.1 Resolve Conflicts for Attribute Changes

Proceed as follows:

1. In the NetWeaver Business Client, select a role that allows you to perform revenue accounting tasks.
2. Choose *Pending Review Worklists* > *Contracts with Conflicts*.
3. The default query lists all contracts that involve conflicts. You can create your own query to apply additional filtering.
4. Select and open a contract.
5. Choose *Edit* to switch to the edit mode.
6. On the *Change Conflicts* tab, the list shows all conflicts in the selected contract. For each item, you can use the *Use Value From* field to specify which version of the change is kept.
   - *Current Value*: the new value applied by the back-end system
   - *Last Manually Changed Value*: the value that you have manually applied

   The following key fields describe the change conflict:
   - *Field Name*: the field on which the conflict occurs
   - *Current Value*: the new value applied by the back-end system
   - *Last Manually Changed Value*: the value that you have manually applied
7. To apply the same change to multiple items, select the items, choose *Mass Update*, and then choose an option for all selected items.
8. Save the changes.
   - To save the changes, choose *Save*.
   - To save the changes and allow the system to accept all future changes that come from the back-end system for this contract, choose *Save and Always Update Contract Automatically*. If you choose this save option, the system automatically accepts all future changes that come from the back-end system until you make another manual change on this contract.

5.2.2.2.2 Resolve Conflicts for Price Allocation Changes

Proceed as follows:

1. In the NetWeaver Business Client, select a role that allows you to perform revenue accounting tasks.
2. Choose *Pending Review Worklists* > *Contracts with Conflicts*.
3. The default query lists all contracts that involve conflicts. You can create your own query to apply additional filtering.
4. Select and open a contract.
5. Choose *Edit* to switch to the edit mode.
6. On the *Price Allocation Conflicts* tab, the list shows price-related changes that occur after your manual price allocation. For each item, you can perform manual allocation again according to the new price.
   The following key fields describe the price allocation status of each performance obligation:
   - *Old Contractual Price*: the contractual price at the time when you made your previous manual allocation; for more information, see Contractual Price [page 74].
   - *Old Allocated Amount*: the amount that you have allocated to this performance obligation in your previous manual allocation
   - *Old Allocation Effect*: the allocation effect calculated according to your previous manual allocation; for more information, see Price Allocation [page 74].

- *Contractual Price*: the latest contractual price
- *Allocated Amount*: the default price allocation applied by the system
- *Allocation Effect*: the allocation effect calculated according to the default price allocation

You can specify the new price allocation in the following fields:

- *New Allocated Amount*: Use this field to enter the amount of transaction price that you want to allocate to this performance obligation.
- *Difference*: The entry in this field is used to calculate the differential that your allocation represents.

> **Note**
>
> When you enter a value in either of these fields, the other field is automatically updated. If values are entered in both fields, the value in the *New Allocated Amount* field is used.

7. Save the changes.
   - To save the changes, choose *Save*.
   - To save the changes and allow the system to accept all future changes that come from the back-end system for this contract, choose *Save and Always Update Contract Automatically*. If you choose this save option, the system automatically accepts all future changes that come from the back-end system until you make another manual price allocation on this contract.

5.2.2.3 Change History

Use

The system tracks changes that occur on certain fields of revenue accounting contracts and performance obligations.

Features

- **Grouping**
  The system groups changes into transactions. In the list of transactions, each item represents a transaction that is saved to the corresponding database table. For example, if you change several attributes of a performance obligation and save the changes, these changes are considered one transaction.
- **Filtering**
  You can filter changes using the following categories.
  - *Manual Changes*
    Changes that you make to attributes on contracts or performance obligations
  - *Price Allocation*
    Manual price allocations that you apply to the contract
  - *Operation Changes*
    Changes that are requested by the back-end operational system
  - *Invoice Changes*
    Changes that are triggered by incoming invoices

- **Price Allocation Changes**
  In a separate area, the system indicates how other changes affect the price allocation of the contract. The information listed in this area is relevant to the transaction that you have selected.
- **Revenue Schedule Changes**
  In a separate area, the system indicates how other changes affect the revenue schedule and spreading of the contract. The information listed in this area is relevant to the transaction that you have selected. The revenue and cost for each relevant accounting period are displayed, with a comparison of the old and new values.

5.2.2.4 Subsequent Changes

The Revenue Accounting system applies some automatic changes following changes made to revenue accounting contracts, including the following:

- **Price reallocation**
  The system triggers a price reallocation if the changes affect price allocation. For example, if you change the standalone selling price of a performance obligation, the system performs price allocation for the contract again according to the new standalone selling price.
- **Revenue schedule changes**
  If fulfillments have already occurred on the contract that has been updated and if the fulfillments have not been posted, the system automatically updates the revenue schedule to accommodate the changes.
- **Retrospective adjustments**
  If fulfillments have already occurred on the contract that has been updated and if the fulfillments have already been posted, the system automatically performs retrospective adjustments. The actual adjustment postings are created when you run a revenue posting job.

5.2.3 Contract Search and Display

Use

You can use the search function to start most of the management tasks concerning revenue accounting contracts and performance obligations.

Features

Search Criteria

You can search for revenue accounting contracts using attributes on contracts and performance obligations. The search function addresses the following typical scenarios:

- **Searching for contracts that have specific attributes**
  For example, you can search for revenue accounting contracts of a certain company code that were created later than a specific date.
- **Searching for contracts that are associated with specific operational documents**

For example, you can search for revenue accounting contracts associated with a certain sales order.

- **Searching for contracts that contain specific performance obligations**
  For example, you can search for revenue accounting contracts that contain performance obligations with a certain performance obligation name.

Result Views

You can display search results using the following views:

- **General view**
  This view is a plain list of revenue accounting contracts.
- **Grouping by contract and then operational document**
  This view is a two-level hierarchical list. The first level lists groupings by contract. The second level lists operational documents associated with each contract. This view also allows you to jump to the corresponding operational document.
- **Grouping by operational document and then contract**
  This view is a two-level hierarchical list. The first level lists groupings by operational document. The second level lists contracts associated with each operational document.

Management Views

When you open a revenue accounting contract to view its details, the system provides the most important information about the current contract and the performance obligations contained in the contract. In addition, the system provides several perspectives with which you can manage the performance obligations in the contract:

- *Performance Obligation Structure*
  In this perspective, you typically perform tasks that involve managing the structure of performance obligations and their relationships with one another.
- *Price Allocation*
  In this perspective, you typically perform tasks that involve managing price allocation. You can view and rearrange the price allocation of the contract.
- *Revenue Schedule*
  In this perspective, you typically perform tasks that involve managing the fulfillment of performance obligations. You can view and manage the fulfillment progress of the performance obligations. By default, fulfillment data is listed by accounting period. You can view the fulfillment details of each accounting period.
- *Comprehensive View*
  This perspective is integrated with many functions that are available in other perspectives. This typically allows you to perform different types of task from a single user interface.

Performance Obligation List

When a list of performance obligations is displayed on a user interface, you have several options for organizing the performance obligations:

- **Standard view**
  This view is a plain list of the performance obligations contained in the contract.
- **Hierarchical view: grouping by operational document and then performance obligation type**
  This view is a three-level hierarchical list of the performance obligations contained in the contract. The first level is a grouping by operational document. The second level is a grouping by performance obligation type. The third level lists all performance obligations in a specific grouping.
- **Hierarchical view: grouping by performance obligation type and then operational document**
  This view is a three-level hierarchical list of the performance obligations contained in the contract. The first level is a grouping by performance obligation type. The second level is a grouping by operational document. The third level lists all performance obligations in a specific grouping.

Activities

You can perform the following tasks:

- Search for contracts
- Display contracts in different views
- Display performance obligations in different views
- Display details of a specific contract
- Display details of a specific performance obligation
- Edit contracts
- Edit performance obligations
- Navigate to other editing options

As an entry point, the search function allows you to navigate to other options for performing specific tasks. For more information, see the following topics:

- Manual Changes [page 55]
- Manual Performance Obligations [page 51]

5.2.4 Validation and Error Handling

Use

When a contract is created or modified, validation is performed to verify that the attributes provided for the contract and its performance obligations are correct. If any errors occur during this process, the system provides several functions for error handling.

Features

- **Error worklist**
  The error worklist allows you to identify errors and make corrections.
- **Suspending revenue posting**
  This feature prevents transactions for certain performance obligations from being posted to the general ledger.
- **Customizable messages and severity levels**
  Some of the messages reported by Revenue Accounting can be customized. Each message indicates an exception scenario, not necessarily an error, that occurs during revenue accounting transactions. You can configure whether this message is ignored, handled as a warning, or handled as an error.
- **Reprocessing contracts**
  Errors may occur because of incorrect configurations on the back-end operational system. After you have corrected the configurations and made sure that the operational document contains correct attributes, you can trigger reprocessing so that the contract can be updated with the latest values on the operational document.

5.2.4.1 Error Worklist

Use

If errors occur during the creation of a contract and its performance obligations, the contract is saved in the error worklist for review. For example, if the operational system provides some invalid attribute values when creating a contract, the contract is saved in the error worklist. In this case, the accountant can identify the errors in the worklist and correct the invalid attributes so that the contract can continue to be processed towards its fulfillment.

Activities

The error worklist allows you to perform the following maintenance tasks:

- Review contracts and performance obligations that have errors
- Manually correct certain attributes

5.2.4.2 Suspending Revenue Posting

Use

A performance obligation can be marked as *Suspend Revenue Posting* so that all revenue-related postings for this performance obligation are suspended until it is unmarked. For example, you can suspend revenue postings for performance obligations that are pending review. When you run a revenue posting job, the system skips postings relating to performance obligations that have this attribute enabled.

While revenue postings are suspended, the system can still receive fulfillment events from the operational system as usual, except that the corresponding postings are not made to the general ledger. When the performance obligation is reopened for revenue postings, fulfillments pending posting are then posted to the original accounting period in which the fulfillments occurred if that period is still open. If the original period is not open, the system selects the earliest period thereafter that is open.

When a performance obligation is created, this attribute is initially determined as follows:

- If the newly created performance obligation contains errors and does not pass the validation (with the validation result set to *Error*), it is automatically marked as *Suspend Revenue Posting*.
- If the newly created performance obligation contains no errors (with the validation result set to *Warning* or *Success*) but is pending review, this attribute is set to the default value associated with the review reason. For more information, see Regular Monitoring [page 65].

Example

On January 5 (in the first accounting period of the year), when a performance obligation is created, it is sent to the review worklist to be manually reviewed and confirmed because it involves a large amount. The performance

obligation is marked as *Suspend Revenue Posting*, which is the default setting associated with the review reason. While revenue postings are suspended, the performance obligation is eventually delivered to the customer and the fulfillment event is passed to the Revenue Accounting system.

For various reasons, the accountant does not have a chance to review the contract by the end of that period. On February 10, the accountant reviews the contract and marks it as reviewed so that it is reopened for revenue postings. At this time, the previous accounting period is already closed. When the accountant runs a revenue posting job at the end of the period, the postings for the performance obligation are posted to the second accounting period of the year.

5.2.5 Regular Monitoring

Use

The accountant may be particularly interested in certain contracts after they have been created or updated. Therefore, you may want to save these contracts in a review worklist so they can be monitored regularly.

Examples

- You want to review all newly created performance obligations.
- You want to review performance obligations that have been manually changed.
- You want to review performance obligations that have large amounts (greater than a threshold amount).
- You want to review time-based performance obligations that do not have a start date specified.
- You want to review all changes made to prices and quantities.
- You want to monitor certain performance obligations regularly.

> **Note**
>
> The regular monitoring worklist tracks both the contract status and the performance obligation status. If any of the performance obligations have the status *Pending Review*, the status of the contract is set to *Pending Review*.

Review Reasons

Each scenario that requires review can be associated with a review reason. The review reason identifies why this performance obligation is sent to the worklist for review. The review reason also determines whether revenue postings must be suspended for this performance obligation until it has been reviewed and confirmed.

Prerequisites

This feature requires that the referenced review reasons are defined in the following Customizing activity:
Financial Accounting > *Revenue Accounting* > *Revenue Accounting Contracts* > *Define Review Reasons*

Activities

The regular monitoring worklist allows you to perform the following maintenance tasks:

- Define queries that help you locate contracts
- Mark contracts as reviewed
- Open contracts for editing
- Add contracts or performance obligations to the worklist

5.3 Operational Documents

Revenue accounting contracts are derived from operational documents in the back-end system. An operational document represents a contract that an enterprise has with a customer. For example, when a sales representative creates a sales order on a Sales and Distribution system, the revenue accounting contract that is created for this transaction refers to the sales order as the operational document.

5.4 Rights of Return

Use

If your company expects to refund some or all of the amount of a sales item to a customer, you may have to specify an estimated percentage of the total amount and post it as a refund liability.

Performance Obligations Applicable for Rights of Return

Rights of return can be applied at performance obligation level. Additionally, the following restrictions apply:

- Linked performance obligations are not allowed to have rights of return. A linked performance obligation is not an independent performance obligation. Therefore, the return of a leading performance obligation always results in the return of its linked performance obligations. The customer cannot cancel linked performance obligations without canceling the leading performance obligation.
- Time-based performance obligations and percentage-of-completion performance obligations are not allowed to have rights of return.
- Non-distinct performance obligations are not allowed to have rights of return.
- One performance obligation can have up to one right of return.

Example

The following are some example scenarios of rights of return applied to performance obligations:

Table 20:

Performance obligation	Composition	Fulfillment Type	Right of Return %
1	Leading	Event-Based	5%
1a	Linked	Time-Based	Not allowed
2	Compound	Event-Based	10%
2.1	Non-Distinct	Event-Based	Not allowed
2.2	Non-Distinct	Event-Based	Not allowed
3	Distinct	Event-Based	Not specified
4	Distinct	Time-Based	Not allowed
5	Distinct	Event-Based	Not specified
5.1	Distinct	Event-Based	6%
5.2	Distinct	Event-Based	7%

Duration of the Right of Return

A right of return lasts for a specified period of time, which can be specified with combinations of the start date, the end date, and the duration time. Typically, the system supports the following two scenarios:

- A fixed time period, with a start date and an end date
  This can be specified with a valid combination of start date, end date, and duration. For example, it can be specified with a start date and a duration.
- Only a duration but no start date or end date
  This represents a right of return that lasts for a fixed length of time but has a variable start date. When part of the performance obligation is delivered, the right of return of the delivered part starts. If the performance obligation is delivered in several installments, the one right of return is actually split into multiple de facto rights of return, each starting from its own delivery date and lasting for the specified length of time.

Amounts of Rights of Return

The following amounts are relevant to rights of return:

- **Revenue Adjustment for Right of Return:** right of return percentage * total recognized price
  This amount is also the amount that is recognized as revenue when the right of return expires.

For a leading performance obligation, the total recognized price also includes the recognized price of its linked performance obligations.

For performance obligations that have a sales bill-of-material structure, the right of return percentage applied on the higher-level performance obligation is automatically brought down to its lower-level performance obligations. If the lower-level performance obligations have their own percentages of right of return, the rights of return are

calculated with those percentages respectively. The system tracks the revenue adjustment for rights of return at the lower level.

For a compound performance obligation that represents multiple non-distinct performance obligations, the right of return percentage is always applied on the compound performance obligation. This percentage is automatically distributed across its non-distinct performance obligations. The system tracks the revenue adjustment for rights of return at the non-distinct performance obligation level.

Changes Resulting from Contract Modifications

Modifications made to the revenue accounting contract can result in retrospective adjustments towards the recognized price, which is determined by the allocated price. The amount of the right of return is calculated based on the recognized price. Therefore, retrospective adjustments are also performed for the right of return.

Prerequisites

The system tracks the revenue adjustment and cost for right of return with two reserved condition types. Therefore, you must define these condition types in the following Customizing activity: *Financial Accounting* > *Revenue Accounting* > *Revenue Accounting Contracts* > *Condition Types* > *Define Reserved Condition Types*

Activities

You can perform the following maintenance tasks for rights of return:

- Manually add rights of return
- Edit rights of return

5.5 Support of Multiple Accounting Principles

Use

Your company's sales with customers may require that you recognize revenue in compliance with different accounting principles. The system allows you to specify the accounting principles that your company uses and customize certain processes and calculations of revenue recognition for each of those accounting principles.

Prerequisites

The contract liabilities and contract assets feature requires that you make the settings in the following Customizing activity:

Choose *Financial Accounting* > *Revenue Accounting* > *Revenue Accounting Contracts* > *Configure Accounting Principle-Specific Settings*.

Features

The system provides the following support for revenue accounting with multiple accounting principles:

- **Contract liabilities and contract assets**
  The system allows you to apply different methods for booking contract liabilities and contract assets, depending on the accounting principle applied. The system provides the following calculation methods:
  - *Invoice Due Date-Based Calculation*
    This method is typically used when the applicable accounting principle requires that you book contract liabilities and contract assets, based on the invoice due amount.
  - *Invoice Date-Based Calculation*
    This method is typically used when the applicable accounting principle requires that you book unbilled receivable and deferred revenue, based on the invoiced amount.
  - *None*
    This method is typically used when the applicable accounting principle does not require that you book any contract liabilities and contract assets.

  For more information, see the documentation provided with the following Customizing activity:
  Choose *Financial Accounting* > *Revenue Accounting* > *Revenue Accounting Contracts* > *Configure Accounting Principle-Specific Settings*.

  > **Note**
  > Different accounting principles may use different terms to refer to the concept of contract liabilities and contract assets.

- **Contract splitting on creation**
  Depending on the configuration, the back-end operational system may request the creation of a contract with performance obligations that involve different accounting principles. In this case, the system automatically splits the contract into several contracts, each for a specific accounting principle.
- **Account determination**
  The system allows you to determine the accounts that are relevant to revenue postings based on the corresponding accounting principle.
  - For both classic General Ledger Accounting and new General Ledger Accounting:
    When you plan your account arrangement, you can reserve account ranges for individual accounting principles. That will make it easier for you to manage your accounts.
  - For new General Ledger Accounting:
    If your system has new General Ledger Accounting enabled, you can post to the same account number in different ledgers, corresponding to their accounting principles. Accounting principles can be assigned to ledger groups in the *Parallel Accounting* settings in Customizing. The system then posts to the corresponding ledger group associated with the accounting principle.

- **Revenue posting for multiple accounting principles**
  When you make revenue postings to the general ledger, the system requires that you select one accounting principle at a time.

5.6 Status Management

A status field is available for performance obligations and revenue accounting contracts respectively. Either a performance obligation or a contract can have one of the following statuses:

- In Process
- Pending Review
- Completed

Performance Obligation Statuses

Table 21:

Status	Details
In Process	This is the normal status of performance obligations. Performance obligations with this status can be processed in all processes of Revenue Accounting. You can change the status *In Process* to the following: • Pending Review • Completed
Pending Review	Performance obligations can have the status *Pending Review* and a corresponding review reason. For more information, see Regular Monitoring [page 65].
Completed	Performance obligations that are completely fulfilled and invoiced have the status *Completed*. You can manually set the status to *Completed* to mark it as complete. You can also change the status from *Completed* to *In Process* to reopen the performance obligation.

Contract Statuses

Table 22:

Status	Details
In Process	A revenue accounting contract has the status *In Process* if all of its performance obligations have the status *In Process*. Specifically, the following conditions are true: • No performance obligations have the status *Pending Review*. • Not all performance obligations have the status *Completed*.
Pending Review	This status is derived from the performance obligations. The contract has the status *Pending Review* if any performance obligation in the contract has the status *Pending Review*.
Completed	This status indicates that the contract is completed. You can manually set a contract to this status if the following conditions are true: • All performance obligations are completed. • The total invoiced amount, the recognized revenue, and the contractual price are equal. • No balance amount is left in the Deferred Revenue, Unbilled Receivable, and Receivable Adjustment accounts for this contract.

5.7 Support of Multiple Currencies

Use

The system provides the following support for multiple currencies:

- **Contract currency for contract management**
  For a revenue accounting contract that involves multiple local currencies, the system manages most of the calculations in one single currency, which is known as the contract currency. The system uses the contract currency to allocate the transaction price among performance obligations and to track fulfillments. When the back-end operational system requests the creation of a contract, it specifies a contract currency. Typically, this currency is the document currency of the operational document. For example, this may be the document currency of the corresponding sales order.
  The system uses the contract currency as the transaction currency when making revenue postings to the general ledger.
- **Multiple local currencies for revenue postings**
  When transferring revenue postings to the general ledger, the system uses the local currencies that are defined for the company code as the local currencies.

> **Note**
>
> The first local currency is defined in the company code master data. The second and third local currencies are defined in the additional local currencies data of the company code (transaction code **OB22**).

- **Fixed exchange rate for revenue postings**
  For each revenue accounting contract, the system uses a fixed exchange rate to calculate currency exchanges for all revenue postings. This exchange rate is calculated at the exchange rates of the date of the first revenue-related event. For example, if a contract is invoiced before any delivery occurs, all the subsequent currency exchanges are based on the exchange rates of the date on which the invoice is issued. When delivery is actually made, the system also uses the exchange rates of that earlier date to perform currency translations.
- **Currency exchange difference**
  The system books exchange differences into predefined accounts. You can use transaction **OB09** to define these accounts. In the configuration, make sure that the exchange difference accounts are associated with the Receivable Adjustment account (the Receivable Adjustment account that you specify for account determination).

Prerequisites

This feature has the following prerequisites:

- You have defined the local currencies for the corresponding company codes.
- You have defined the exchange difference account.

5.8 Reprocessing

In some scenarios, you have to reprocess certain objects following changes that have been made to configurations or to the logistics application. For example, after applying correct configurations, you have to regenerate certain objects that already have incorrect attributes. Revenue Accounting supports the following types of reprocessing:

- **Reprocessing account determination**
  The reprocessing of account determination works as follows:
  - The system reprocesses account determination using the account on the latest condition types passed from the logistics application.
  - This process only updates the accounts and account assignment data determined. It does not derive the attributes of performance obligations again.
  - Reprocessing updates only items for which revenue postings have not been made. It does not update items for which revenue postings have already been transferred to the general ledger.
  - You can use this function to fix accounts that have been determined incorrectly for the contract.
- **Reprocessing contracts**
  The reprocessing of contracts works as follows:
  - The system regenerates certain objects, such as performance obligations.

- The system retrieves all condition types, including new condition types, to address the changes made to the operational document.
- The system re-derives attributes of performance obligations and updates the performance obligations.
- You can use this function to fix attributes that have been derived incorrectly for performance obligations in the contract.

6 Price Allocation

Revenue Accounting allows you to allocate the transaction price among the performance obligations in a revenue accounting contract. The standard price allocation is based on standalone selling prices. However, the system allows you to specify other methods of price allocation to address your specific business scenarios.

6.1 Price Determination

When determining the transaction price of a revenue accounting contract, Revenue Accounting applies the pricing conditions passed from the back-end operational system. Then, Revenue Accounting aggregates all pricing conditions to determine the transaction price of the contract.

However, Revenue Accounting does not include the following condition types when calculating the transaction price of a contract:

- Non-pricing condition types, such as costing condition types
  Each condition entry includes a *Pricing/Costing* attribute that indicates whether the condition is a pricing or costing condition.
- Statistical condition types
  Each condition entry includes a *Statistical* attribute that indicates whether the condition a statistical or non-statistical condition.

The amounts on these condition types are not added to the transaction price and therefore are not allocated.

6.1.1 Condition Exclusion List

You can maintain an exclusion list of condition types that you want to exclude from price allocation. Conditions of these types are added to the total transaction price. However, they are not included in the price allocation. Amounts on these condition types are added back to the allocated prices after the allocation is performed.

The exclusion list is available in the following Customizing activity:

Financial Accounting (New) > *Revenue Accounting* > *Revenue Accounting Contracts* > *Condition Types* > *Define Condition Types Not Requiring Allocation*

6.1.2 Contractual Price

Use

After a performance obligation has been created, its original price can be changed multiple times over the lifecycle of its fulfillment. For example, the price can be changed on the sales order after the sales order has been created

initially. The price of a sales order item can be changed when it is invoiced. The contractual price is the final price that has all price changes consolidated but is the transaction price before allocation occurs. Therefore, the contractual price is the effective price of the performance obligation before price allocation.

Example

Assume that your company sells 10 articles of product A at EUR 400 each and 10 articles of product B at EUR 600 each to a customer. When a revenue accounting contract is created, it includes two performance obligations: A and B. Then the transaction price is calculated and allocated between these two performance obligations, for example, according to their standalone selling prices.

Table 23:

Performance Obligation	Contractual Price	Allocated Price
A	EUR 4,000	EUR 5,000
B	EUR 6,000	EUR 5,000

Later, when 5 articles of product A are invoiced, the invoice changes the price of product A to 350 EUR each (for the 5 articles being invoiced). In this case, the contractual prices and price allocation are as follows:

Table 24:

Performance Obligation	Contractual Price	Allocated Price
A	EUR 3,750	EUR 4,875
B	EUR 6,000	EUR 4,875

> **Note**
>
> In this example, the price change applies only to the 5 articles of product A being invoiced. Therefore, the price of the remaining 5 articles remains unchanged. In this case, the total price of performance obligation A becomes EUR 3,750, and the transaction price of the entire contract becomes EUR 9,750. The contractual price is the effective price at which the product is sold. The allocated price determines how much revenue can be recognized when the performance obligation is fulfilled.

6.2 Standalone Selling Price-Weighted Allocation

Use

The standard price allocation among performance obligations is based on standalone selling prices. The system calculates the transaction price by consolidating the amounts on all pricing conditions that require allocation. Then it redistributes the transaction price to performance obligations in proportion to their standalone selling

prices. A performance obligation may represent multiple units of a sold item. Therefore, the amount allocated to the performance obligation is in proportion to its standalone selling price multiplied by the quantity.

The standalone selling price is the “fair value” selling price of a distinct good or service if it is sold on its own.

Example

Jolin’s Software Ltd. sells business software. One of her best-selling products is an accounting tool. In a contract with a customer, Jolin’s Software Ltd. promises to deliver a software license for 15 users and maintenance service for 12 months in exchange for a total of EUR 4,000. When sold separately, a license for one user sells for EUR 200, and maintenance service for every 12 months sells for EUR 2,000.

The sales order includes 15 software licenses billed at EUR 200 each and one unit of maintenance service billed at EUR 1,000 each period.

Allocation based on standalone selling prices produces the following result:

Table 25:

Index	Performance Obligation	Standalone Selling Price	Quantity	Original PR00 Amount	Allocated PR00 Amount
1	Software License	EUR 200	15 PC	EUR 200 * 15	EUR 2,400
2	Maintenance Service	EUR 2,000	1 Period	EUR 1,000	EUR 1,600

6.3 Standalone Selling Price Tolerances

Use

Sometimes, the transaction prices of your sold items are not exactly the same as, but are very close to, their standalone selling prices. In this case, your items are sold almost at fair value, and therefore you do not want to perform price allocation on this contract.

The standalone selling price tolerance allows you to specify , instead of a single value, a range of standalone selling prices. The system performs price allocation only when at least one of the items in the contract is sold at a price beyond its specified price range.

The tolerance can be specified either as an amount or as a percentage.

Example

Example 1:

Assume that you have a revenue accounting contract that resembles the following:

Table 26:

Performance Obligation	Transaction Price	Standalone Selling Price (SSP)	SSP Tolerance	SSP Tolerance Percentage	Price Within Specified Range?
POB1	EUR 18	EUR 20	EUR 2	Not applicable	Yes
POB2	EUR 20	EUR 20	EUR 2	Not applicable	Yes

In this case, price allocation is **not** performed on the contract.

Example 2:

Assume that you have a revenue accounting contract that resembles the following:

Table 27:

Performance Obligation	Transaction Price	Standalone Selling Price (SSP)	SSP Tolerance	SSP Tolerance Percentage	Price Within Specified Range?
POB1	EUR 17	EUR 20	EUR 2	Not applicable	No
POB2	EUR 20	EUR 20	EUR 2	Not applicable	Yes
POB3	EUR 32	EUR 30	EUR 3	Not applicable	Yes

In this case, the transaction price of POB1 is beyond the range of EUR 18 to EUR 22. Therefore, price allocation **is** performed on the contract.

6.4 Residual Price Allocation

Use

Certain sold items do not have standalone selling prices. For example, when an item is never sold separately. In this case, you can configure the system to mark the performance obligation as *Residual* when generating a performance obligation for the item.

Performance obligations are organized in a tree structure. For performance obligations under the same branch or under the root, one of the performance obligations can be missing the standalone selling price and be marked as residual.

When the system allocates the transaction price, it aggregates the amounts of all pricing condition types and allocates the total amount down the hierarchy of performance obligations. When the residual method is used for allocation, the following rules apply:

- Of all performance obligations with the same higher-level performance obligation in the hierarchy, only one performance obligation can be marked as residual.
- The performance obligation marked as residual does not have a standalone selling price.
- All performance obligations other than the one marked as residual must have standalone selling prices.
- Performance obligations with standalone selling prices use their standalone selling prices as the allocated amounts. After these performance obligations have claimed their portions, the remainder is assigned to the performance obligation that is marked as residual.
- If the sum of the standalone selling prices exceeds the amount that is to be allocated, a zero amount is assigned to the performance obligation marked as residual. The total amount is allocated to the other performance obligations in proportion to their standalone selling prices.

Example

Example 1:

Assume that your company sells a bundle for EUR 50. The bundle is composed as follows:

- Two pieces of product A that sell for EUR 10 each
- One piece of product B that sells for EUR 20
- One piece of product C that does not have a standalone selling price

You have configured the system to create a performance obligation for each product in the bundle, and to mark the performance obligation for product C as residual. In this case, the residual method results in the following allocation:

Table 28:

Performance obligation	Sales Order Item	Standalone Selling Price	Quantity	Allocated Amount
POB1	Product A	EUR 10	2 PCS	EUR 20 = 10*2
POB2	Product B	EUR 20	1 PCS	EUR 20 = 20*1
POB3	Product C	None	1 PCS	EUR 10 = 50-20-20

Example 2:

Assume that your company sells a bundle for EUR 30. The bundle is composed as follows:

- Two pieces of product A that sell for EUR 10 each
- One piece of product B that sells for EUR 20
- One piece of product C that does not have a standalone selling price

You have configured the system to create a performance obligation for each product in the bundle, and to mark the performance obligation for product C as residual. In this case, the residual method results in the following allocation:

Table 29:

Performance obligation	Sales Order Item	Standalone Selling Price	Quantity	Allocated Amount
POB1	Product A	EUR 10	2 PCS	EUR 15 = 30*[(10*2)/(10*2+20*1)]
POB2	Product B	EUR 20	1 PCS	EUR 15 = 30*[(20*1)/(10*2+20*1)]
POB3	Product C	None	1 PCS	EUR 0

6.5 Performance Obligations Excluded from Allocation

For each revenue accounting contract, you can exclude certain performance obligations from price allocation. Consequently, these performance obligations neither take any value from nor give any value to other performance obligations in the contract. The allocated prices of these performance obligations are always the same as they appear in the operational document.

6.6 Customized Allocation

Use

Revenue Accounting provides Business Add-Ins (BAdIs) that allow you to implement your own logic for allocating transaction prices.

The following BAdIs suit your specific needs of price allocation:

- BAdI: Price Allocation (from Single Node Down)
- BAdI: Price Allocation (Flexible Allocation)

Prerequisites

- Choose *Financial Accounting* > *Revenue Accounting* > *Revenue Accounting Contracts* > *Business Add-Ins* > *Price Allocation* > *BAdI: Price Allocation (from Single Node Down)*.
- Choose *Financial Accounting* > *Revenue Accounting* > *Revenue Accounting Contracts* > *Business Add-Ins* > *Price Allocation* > *BAdI: Price Allocation (Flexible Allocation)*.

6.7 Allocation Effect

Use

Revenue Accounting can represent the effect of price allocation on a differential basis. Allocation effect indicates how much the allocated prices differ from their original prices. When the system performs price allocation, it aggregates the original prices of all performance obligations and distributes the total amount among the performance obligations. In this redistribution process, some performance obligations gain value while other performance obligations lose value in their allocated prices.

Performance obligation-level allocation effect

This amount indicates the difference effected on a specific performance obligation as a result of price allocation. A positive amount indicates that the allocated price is greater than its original price. A negative amount indicates that the allocated price is less than its original price.

Contract-level allocation effect

This amount indicates how significantly price allocation has occurred in the contract. This amount is the total amount of value that has flowed from some performance obligations to others in the contract.

Prerequisites

The system requires that a reserved condition type is defined for representing performance obligation-level allocation effect amounts. This condition type is reserved for Revenue Accounting, and it must differ from any other condition type used in the operational system. We recommend that you configure a condition type in the operational system to make sure no other condition type uses the same name.

This setting is available in the following Customizing activity: *Financial Accounting (New)* > *Revenue Accounting* > *Revenue Accounting Contracts* > *Condition Types* > *Define Reserved Condition Types*

Example

Assume that your company sells a bundle for EUR 40. The bundle is composed as follows:

- Two pieces of product A that sell for EUR 10 each
- One piece of product B that sells for EUR 20

Price allocation is performed as follows:

Table 30:

Performance Obligation	Sales Order Item	Transaction Price	Allocated Amount	Adjustment
POB1	Product A	EUR 10 * 2	EUR 10	EUR -10

Performance Obligation	Sales Order Item	Transaction Price	Allocated Amount	Adjustment
POB2	Product B	EUR 20	EUR 30	EUR +10

In this case, the allocation effect of the entire contract is EUR 10.

6.8 Price Allocation for Structured Performance Obligations

Performance obligations in a contract can be structured hierarchically to address specific business scenarios. Price allocation considers the structure as follows:

- **From the top down**
  When allocating the transaction price, the system passes the transaction price down the tree structure. The system first splits the transaction price among the performance obligations that do not have a higher-level performance obligation (A, D, and E in the diagram). These performance obligations are at the root of the tree structure. Then, for each of these performance obligations, the system passes the distributed amount further down to its lower-level performance obligations (from A to B and C in the diagram). The system continues this process until it walks through the entire tree.
  The system treats performance obligations that have the same higher-level performance obligation (B and C in the diagram) or no performance obligation (A and B) should be a group (A, D, and E). Allocation occurs among the group first, and then for each group member.
- **Fair value check**
  The standalone selling price can be a price range (set by a standalone selling price tolerance) as opposed to a single value. Before splitting an amount among a group of performance obligations, the system checks whether the price originally assigned is within the boundaries set by the standalone selling price tolerance. If the price exceeds the range, the system splits the amount among the group. If the price does not exceed the range, the members of this group keep their original amounts, but these amounts can be passed down for further allocation.
- **Linked performance obligations**
  A leading performance obligation is considered to be at the same level as its linked performance obligations (D and E in the diagram). However, a leading performance obligation and its linked performance obligations are always paired together in terms of fair value check. When checking the fair value of a leading performance obligation, the system first aggregates the standalone selling prices on both the leading performance obligation and its linked performance obligations ($60+$40 in the diagram). The system then compares the original price of the leading performance obligation with the total of the standalone selling prices ($100 in the diagram).
  If the combination of leading and linked performance obligations is verified as sold at fair value and if all the other performance obligations in the same group are verified as sold at fair value, the price is not split among the group (A, D, and E in the diagram). However, price allocation must occur between the leading performance obligations and its linked performance obligations (between D and E in the diagram).
  If the combination of leading and linked performance obligations is verified as not sold at fair value or if any of the other performance obligations in the same group is verified as not sold at fair value, price allocation occurs among all performance obligations in the group (A, D, and E in the diagram).
- **Sales BOM structures**
  For a sales BOM structure, the system always allocates the price down to the item level of the BOM structure, regardless of where the pricing conditions are assigned.

- **Compound performance obligations**
  For a compound performance obligation, the system proceeds as follows:
  - If the transaction price is calculated from the pricing conditions assigned on those non-distinct performance obligations, the system allocates the price down to the level of the non-distinct performance obligations.
  - If the transaction price is calculated from the pricing conditions assigned on the compound performance obligation, the system allocates the price only down to the compound performance obligation.

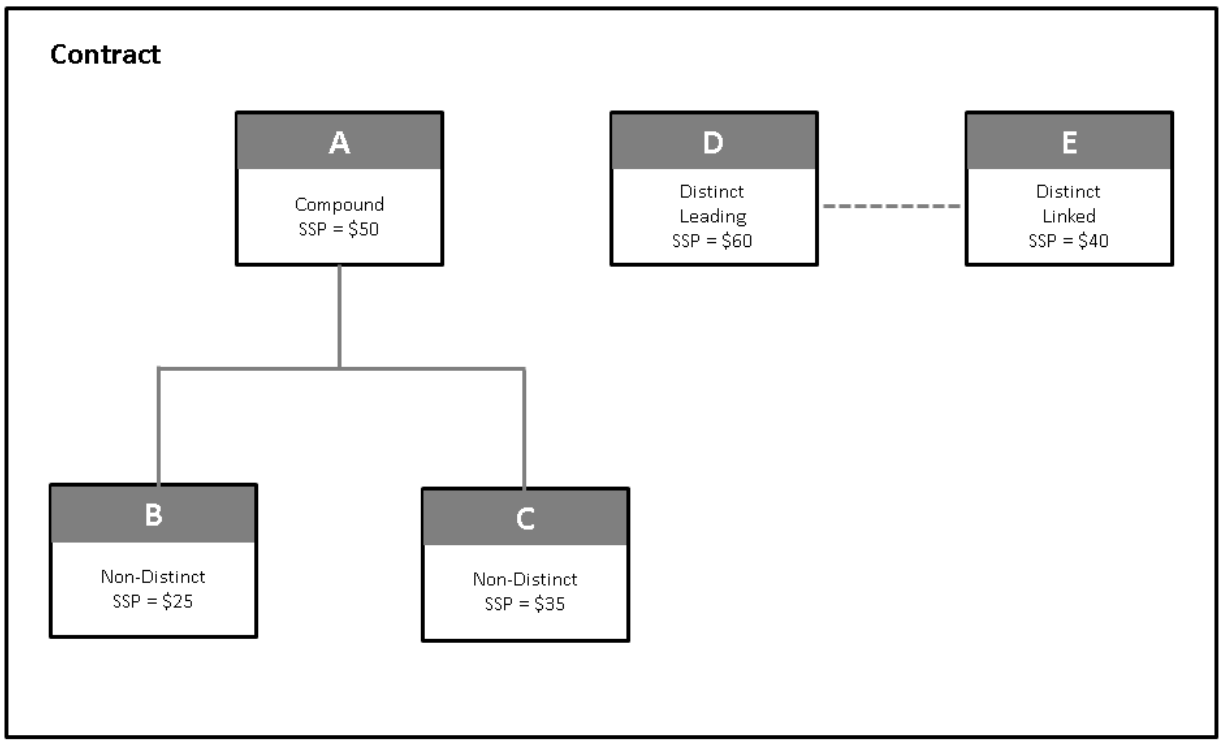

Figure 2: Example: Price Allocation in a Hierarchy

7 Contract Change

The Revenue Accounting and Reporting system can perform contract change. The changes may come from the following sources:

- Operational documents, such as sales order, invoice, and contract
- BRFplus

> **Note**
>
> Usually the change is triggered by changes of performance obligation attributes.

- UI

Contract change is a change of contractual price and condition. There are three types of contract change:

- Change of estimates
- Contract modification
- Attributes change from inception date

The Revenue Accounting system determines whether the change is change of estimates or contract modification or attributes change from inception date. Change of estimates can change the price and quantity of all the performance obligations no matter how much they have been fulfilled. However, Contract modification may only change the total price and quantity of a contract after it has been partially fulfilled. Contract modification may change the value of the part that remains to be fulfilled. Different change types of contract modification have different ways of handling the part that has already been fulfilled before the change.

Additionally, you can apply your own logic through a Customizing activity. Choose *Financial Accounting* > *Revenue Accounting* > *Revenue Accounting Contracts* > *Business Add-Ins* > *BAdI: Determination of Contract Change for Performance Obligation*.

> **Note**
>
> Changes occur in a same period are consolidated.

> **Example**
>
> In operational documents, there are two changes applied to a performance obligation in a same period. The details are in the following table:

Table 31:

Transaction Date	Accounting Period	Changed Attributes of the Performance Obligation	Before the Change	After the Change
2015-08-03	2015008	New Performance Obligation	No Standalone Selling Price	Standalone Selling Price =EUR 1,000

Transaction Date	Accounting Period	Changed Attributes of the Performance Obligation	Before the Change	After the Change
2015-08-19	2015008	Standalone Selling Price of the New Performance Obligation	Standalone Selling Price =EUR 1,000	Standalone Selling Price =EUR1,2000

However, our system only handle one change in the same period as follows:

Table 32:

Accounting Period	Changed Attributes of the Performance Obligation	Before the Change	After the Change
2015008	New Performance Obligation		Standalone Selling Price =EUR 1,200

7.1 Invoicing

The back-end operational system can pass customer invoices to the Revenue Accounting system. Each invoicing event can modify the revenue accounting contract or report a fulfillment event.

Contract Modification

An invoice passed to the Revenue Accounting system can trigger contract modifications as follows:

- **Modifying the contractual price**:
  The amount of a condition on the invoice can differ from the amount of the same condition on the original contract. The system handles this difference as a price change. The price change applies only to the part that is being invoiced. For example, if a sales order includes 10 units of a product at a price of EUR 10 each and an invoice is issued that includes a quantity of 2 and a price of EUR 15 each, the 2 units being invoiced have the new price of EUR 15 each and the remaining 8 units still have the old price of EUR 10 each.
- **Modifying the conditions**:
  An invoice passed to the Revenue Accounting system can have different condition types to the condition types on the original contract. If the invoice includes condition types that are not included in the original contract, the system handles this difference as a price change. If some condition types that are included in the original contract are missing from the invoice, the system assumes that those condition types are also included in the invoice but have an amount of zero.
- **Preventing changes from being made to account determination**:
  The conditions in an invoice can have different accounts to the accounts assigned in the sales order. However, the system always uses the accounts originally assigned in the sales order instead of the new accounts in the invoice.

> **Note**
>
> A price change can be made through condition type changes made directly to the sales order instead of through invoicing. The system handles the addition of condition types as a general change to the price. However, if the change involves removing condition types, the system handles this situation differently depending on whether any part of the condition type has been invoiced. If the condition type has not been invoiced, the condition type is removed directly. If part of the condition type has been invoiced, the system retains the removed condition type with an amount that is the same as the invoiced amount.

Marking an Invoice as Final

When the back-end system passes an invoice to the Revenue Accounting system, it indicates whether the invoice is final for the contract. If the invoice is marked as final, the system assumes that no more invoices are to be issued for this contract and that the totally invoiced amount is the final price of the contract. In this case, a contract modification is triggered.

Due Date of Invoice

The back-end system can specify an invoice due date when issuing an invoice to the Revenue Accounting system. The invoice due date is important for the calculation of contract liabilities and contract assets. For more information, see Support of Multiple Accounting Principles [page 68].

Credit Memos and Debit Memos

The back-end operational system can pass credit memos and debit memos to the Revenue Accounting system as a special type of invoice. With this type of invoice, the invoice quantity is ignored. In some rare scenarios, the credit memo amount can exceed the original invoiced amount.

Invoicing for Milestone Billing Plans

The back-end operational system can pass invoices to the Revenue Accounting system for the scenario of milestone billing plans, which can be defined with several billing items, each with an invoice date and an invoiced amount that represents a percentage of the contract. Each sales order item with a milestone billing plan is processed as a separate performance obligation.

Invoicing for Time-and-Material Projects

For a time-and-material (T&M) project, the sales order does not contain the price and is not relevant to price allocation in the beginning. Invoicing is based on resources and materials that are actually consumed and revenue is recognized accordingly. T&M items addressed by each invoice may vary. Each T&M item is processed as a performance obligation with a quantity of 1. The T&M items do not have a price in the beginning. Therefore, performance obligations are created with an amount of zero. Every time that a T&M item is invoiced, a contract modification is triggered that increases the contractual price. Typically, a T&M item is invoiced with a debit memo.

Planned Invoices

If a performance obligation involves a billing plan, the performance obligation is invoiced according to the schedule defined in the billing plan instead of according to the invoicing events that actually occur in the operational application. The planned invoice amount is fixed when the performance obligation is created. The integration component calculates the amount to be invoiced for each specific period and passes the planned invoices to the Revenue Accounting system for processing. When calculating contract liabilities and assets, the system performs the calculation according to the billing plan. In the *Revenue Schedule* user interface, the planned invoice amount calculated according to the billing plan is displayed under *Planned Invoice*, and the actually invoiced amount calculated according to invoicing events is displayed under *Invoiced Amount*.

Example

The billing plan starts from January 1, 2014 for 5 periods (each period with EUR 100) and invoices are passed to Revenue Accounting for period 1 and period 2. In this case, the Revenue Schedule displays the following amounts:

Table 33:

Period	Invoiced Amount	Planned Invoice
Period 1	EUR 100	EUR 100
Period 2	EUR 100	EUR 100
Period 3	EUR 0	EUR 100
Period 4	EUR 0	EUR 100
Period 5	EUR 0	EUR 100

7.2 Change of Estimates

When processing a change made to contracts and performance obligations, Revenue Accounting may determine the change is handled as change of estimates. The total price and quantity of a contract may change no matter

whether it has been partially fulfilled. Therefore, this type of change does not only change the part that remains to be fulfilled, but also those have been fulfilled. The system reallocates contractual prices among performance obligations in a contract from inception date of the contract and add catch-ups to the originally allocated price. When performance change of estimates, the system recalculates allocated prices and make up with catch-ups. The catch-ups are calculated as follows:

Catch-up= (Updated Allocated Price-Original Allocated Price)*Fulfillment Percentage

Example

There is a contract that contains three performance obligations. Hereafter, POB and SSP in tables refer to performance obligation and standalone selling price respectively. Detailed information of the contract is in the following table:

Table 34:

	Fulfillment (%)
POB 1 (software)	100%
POB 2 (maintenance)	20%
POB 3 (implementation)	30%

Before change of estimates, the system distributes the transaction price to performance obligations in proportion to their standalone selling prices and corresponding calculates recognized revenues. The result is showed in the following table:

Table 35:

	Contractual Price	SSP	Allocated Price	Fulfillment (%)	Recognized Revenue
POB 1 (software)	EUR 2000	EUR 2000	EUR 2000	100%	EUR 2000
POB 2 (maintenance)	EUR 200	EUR 200	EUR 200	20%	EUR 40
POB 3 (implementation)	EUR 500	EUR 500	EUR 500	30%	EUR 150
Sum	EUR 2700	EUR 2700	EUR 2700		EUR 2190

Then the contractual price and standalone selling price of performance obligation 2 are raised to EUR 290 and EUR 300 respectively. The system applies a change of estimates: it redistributes the transaction price to performance obligations in proportion to their new standalone selling prices and recalculates corresponding recognized revenues by adding catch-ups. The catch-ups are calculated in the following way:

Catch-up= (Updated Allocated Price-Original Allocated Price)*Fulfillment Percentage

The result is showed in the following table:

Table 36:

	Contractual Price	SSP	Allocated Price	Fulfillment (%)	Recognized Revenue	Catch-up
POB 1 (software)	EUR 2000	EUR 2000	EUR 1992.86	100%	EUR 1992.86=2000-7.14	-7.14
POB 2 (maintenance)	EUR 290	EUR 300	EUR 298.93	20%	EUR 59.79=40+19.79	19.79
POB 3 (implementation)	EUR 500	EUR 500	EUR 498.21	30%	EUR 149.46=150-0.54	-0.54
Sum	EUR 2790	EUR 2790	EUR 2790		EUR 2202.11	

7.3 Contract Modification

According to IFRS 15 Revenue from Contracts with Customers, a contract modification is a change in the scope or price (or both) of a contract that is approved by the parties to the contract. When the system performs contract modification, the modification only applies to partially fulfilled performance obligations. There are three types of contract modification:

- Prospective Change
- Retrospective Change
- Mixed Change

The system checks all open performance obligations and determines change type according to the following table:

Table 37:

POB	Change Type
Unit-distinct	Prospective Change
None-unit-distinct	Retrospective Change

> **Note**
>
> Unit-distinct fulfillments are distinct with each other at unit level.

7.3.1 Prospective Changes

Use

Prospective change is a change that occurs on partially fulfilled performance obligations (POB). The fulfillments are unit-distinct. When applying a prospective change, the system will perform the following calculations:

Table 38:

Calculated Object	Formula
Remaining SSP	Remaining Standalone Selling Price = Standalone Selling Price*(1-Fulfillment percentage) OR Remaining Standalone Selling Price = Standalone Selling Price*(1-Fullfiled Period/Duration)

Note

In some cases, the remaining standalone selling price is calculated with both of the two formulas.

Example

There is a leading performance obligation (A) and a linked performance obligation (B). The following table provides the details of the two performance obligations:

Table 39:

	Fulfillment Type or Event Type	Effective Quantity	Duration	SSP	Contractual Price	Allocated Price
POB A (Leading)	Goods issue	3		EUR 2,000	EUR 2,000	EUR 1,600
POB B (Linked)	Time-based (start date type 3)	1	10	EUR 500	0	EUR 400

Calculated Object	Formula
	When 2 units of leading performance obligation A are fulfilled at goods issue, its linked performance obligation B is triggered to start fulfillment during the same period. Here is the fulfillment plan: Table 40:

	POB A		POB B			
Period	Fulfilled Quantity	Fulfillment (%)	Fulfillment Quantity	Fulfillment (%)	SSP	Recognized Revenue
1	2	67%	0.067	6.7%	EUR 33.5	EUR 26.8
2			0.067	6.7%	EUR 33.5	EUR 26.8
3			0.067	6.7%	EUR 33.5	EUR 26.8
4			0.067	6.7%	EUR 33.5	EUR 26.8
5			0.067	6.7%	EUR 33.5	EUR 26.8
6			0.067	6.7%	EUR 33.5	EUR 26.8
7			0.067	6.7%	EUR 33.5	EUR 26.8
8			0.067	6.7%	EUR 33.5	EUR 26.8
9			0.067	6.7%	EUR 33.5	EUR 26.8
10			0.067	6.7%	EUR 33.5	EUR 26.8

Calculated Object	Formula
	Then in period 5, the duration of the performance obligation is changed to 14. The calculation of performance obligation B after the change is showed in the following table: Table 41:

	POB A		POB B			
Period	Fulfilled Quantity	Fulfillment (%)	Fulfillment Quantity	Fulfillment (%)	SSP	Recognized Revenue
1	2	67%	0.067	6.7%	EUR 33.5	EUR 26.8
2			0.067	6.7%	EUR 33.5	EUR 26.8
3			0.067	6.7%	EUR 33.5	EUR 26.8
4			0.067	6.7%	EUR 33.5	EUR 26.8
5			0.0402 = (0.67-0.067*4)/10	4.02%	EUR 20.1	EUR 16.08
6			0.0402	4.02%	EUR 20.1	EUR 16.08
7			0.0402	4.02%	EUR 20.1	EUR 16.08
8			0.0402	4.02%	EUR 20.1	EUR 16.08
9			0.0402	4.02%	EUR 20.1	EUR 16.08
10			0.0402	4.02%	EUR 20.1	EUR 16.08

<table>
<tr><th>Calculated Object</th><th>Formula</th></tr>
<tr><td></td><td>
<table>
<tr><th></th><th colspan="2">POB A</th><th colspan="4">POB B</th></tr>
<tr><th>Period</th><th>Fulfilled Quantity</th><th>Fulfillment (%)</th><th>Fulfillment Quantity</th><th>Fulfillment (%)</th><th>SSP</th><th>Recognized Revenue</th></tr>
<tr><td>11</td><td></td><td></td><td>0.0402</td><td>4.02%</td><td>EUR 20.1</td><td>EUR 16.08</td></tr>
<tr><td>12</td><td></td><td></td><td>0.0402</td><td>4.02%</td><td>EUR 20.1</td><td>EUR 16.08</td></tr>
<tr><td>13</td><td></td><td></td><td>0.0402</td><td>4.02%</td><td>EUR 20.1</td><td>EUR 16.08</td></tr>
<tr><td>14</td><td></td><td></td><td>0.0402</td><td>4.02%</td><td>EUR 20.1</td><td>EUR 16.08</td></tr>
</table>
</td></tr>
<tr><td>Remaining Price</td><td>Remaining Price = Total Contractual Price - Recognized Revenue of Unit-distinct Performance Obligation</td></tr>
</table>

Example

There is a contract that contains three performance obligations. The following table provides the details of the contract:

Table 42:

	Unit-distinct	Fulfillment(%)
POB 1 (Software 1)	Yes	100%
POB 2 (Software 2)	Yes	20%
POB 3 (Software 3)	Yes	30%

Before a prospective change, the system distributes the transaction price to performance obligations in proportion to their standalone selling prices and calculates the corresponding recognized revenues. The result is shown in the following table:

Table 43:

	Contractual Price	SSP	Allocated Price	Fulfillment (%)	Recognized Revenue
POB 1 (Software 1)	EUR 2,000	EUR 2,000	EUR 2,000	100%	EUR 2,000
POB 2 (Software 2)	EUR 200	EUR 200	EUR 200	20%	EUR 40
POB 3 (Software 3)	EUR 500	EUR 500	EUR 500	30%	EUR 150
Total	EUR 2,700	EUR 2,700	EUR 2,700		EUR 2,190

Then the contractual price and standalone selling price of performance obligation 2 are raised to EUR 300 and EUR 300, respectively. The system applies a prospective change: the system calculates the remaining standalone selling prices and uses them to reallocate the prices of the remaining contractual price. The remaining standalone selling prices are calculated as follows:

Remaining Standalone Selling Prices = Standalone Selling Price*(1-fulfillment percentage)

The system redistributes the remaining price to performance obligations in proportion to their remaining standalone selling prices. The result is showed in the following table:

Table 44:

	Contractual price	SSP	Allocated Price	Fulfillment (%)	Recognized Revenue	Remaining Price	Remaining SSP	Remaining Price Allocated
POB 1 (Software 1)	EUR 2,000	EUR 2,000	EUR 2,000	100%	EUR 2,000			
POB 2 (Software 2)	EUR 300	EUR 300	EUR 288.14	20%	EUR 40		EUR 240	EUR 248.14
POB 3 (Software 3)	EUR 500	EUR 500	EUR 511.86	30%	EUR 150		EUR 350	EUR 361.86
Total	EUR 2,800	EUR 2,800	EUR 2,800		EUR 2,190	EUR 610	EUR 590	EUR 610

7.3.2 Retrospective Changes

Retrospective change is a change occurs on partially fulfilled performance obligations of which fulfillments are not unit-distinct. When there is no performance obligations with unit-distinct fulfillment or all performance obligations

with unit-distinct fulfillment are fully fulfilled, the system applies retrospective change to the contract. When applying prospective change, the system will perform the following calculations:

Table 45:

Calculated Object	Formula
Remaining Standalone Selling Price	Remaining Standalone Selling Price=Standalone Selling Price
Remaining Price	Remaining Price=Total Contractual Price
Catch-up	Catch-up= (Allocated Price-Allocated Remaining Price)*Fulfillment Percentage

Example

There is a contract that contains three performance obligations. Detailed information of the contract is in the following table:

Table 46:

	Unit-distinct	Fulfillment (%)
POB 1 (Software)	Yes	100%
POB 2 (Maintenance)	No	20%
POB 3 (Implementation)	No	30%

Before retrospective change, the system distributes the transaction price to performance obligations in proportion to their standalone selling prices and corresponding calculates recognized revenues. The result is showed in the following table:

Table 47:

	Contractual price	SSP	Allocated Price	Fulfillment (%)	Recognized Revenue
POB 1 (Software)	EUR 2000	EUR 2000	EUR 2000	100%	EUR 2000
POB 2 (Maintenance)	EUR 200	EUR 200	EUR 200	20%	EUR 40
POB 3 (Implementation)	EUR 500	EUR 500	EUR 500	30%	EUR 150
Sum	EUR 2700	EUR 2700	EUR 2700		EUR 2190

Then the contractual price and standalone selling price of performance obligation 3 are raised to EUR 600 and EUR 600 respectively. The system applies retrospective change: the system calculates remaining standalone selling prices and uses them to reallocated prices of the remaining contractual price. The remaining standalone selling prices are calculated in the following way:

Remaining Standalone Selling Prices=Standalone Selling Price

Since performance obligation 2 and 3 cannot be fulfilled at unit level, all of the two performance obligations should be included in reallocation. Therefore, remaining price is the contractual price of all partially fulfilled performance obligation of which fulfillment is not unit-distinct. The system redistributes the remaining price to performance obligations in proportion to their remaining standalone selling prices. The catch-up is calculated in the following way:

Catch-up= (Allocated Price-Allocated Remaining Price)*Fulfillment Percentage

The result is showed in the following table:

Table 48:

	Contractual Price	SSP	Allocated Price	Fulfillment (%)	Recognized Revenue	Remaining Price	Remaining SSP	Allocated Remaining Price	Catch-up
POB 1 (Software)	EUR 2000	EUR 2000	EUR 2000	100%	EUR 2000		0		
POB 2 (Maintenance)	EUR 200	EUR 200	EUR 200	20%	EUR 40		EUR 200	EUR 200	
POB 3 (Implementation)	EUR 600	EUR 600	EUR 600	30%	EUR 150		EUR 600	EUR 600	EUR 30
Sum	EUR 2800	EUR 2800	EUR 2800		EUR 2190	800	EUR 800	EUR 800	EUR 30

7.3.3 Mixed Changes

Mixed change, name both prospective change and retrospective change, occurs when there are partially fulfilled performance obligations of which some fulfillments are unit-distinct and some are not. When applying prospective change, the system will perform the following calculations:

Table 49:

Calculated Object	Formula
Remaining Standalone Selling Price	Remaining Standalone Selling Price of Unit-distinct Performance Obligation=Standalone Selling Price*(1-fulfillment percentage) Remaining Standalone Selling Price of None-Unit-distinct Performance Obligation=Standalone Selling Price
Remaining Price	Remaining Price =Total Contractual Price - recognized Revenue of Unit-distinct Performance Obligation

Example

There is a contract that contains three performance obligations. Detailed information of the contract is in the following table:

Table 50:

	Unit-distinct	Fulfillment (%)
POB 1 (Software 1)	Yes	100%
POB 2 (Software 2)	Yes	20%
POB 3 (Implementation)	No	30%

Before mixed change, the system distributes the transaction price to performance obligations in proportion to their standalone selling prices and corresponding calculates recognized revenues. The result is showed in the following table:

Table 51:

	Contractual Price	SSP	Allocated Price	Fulfillment (%)	Recognized Revenue
POB 1 (Software 1)	EUR 2000	EUR 2000	EUR 2000	100%	EUR 2000
POB 2 (Software 2)	EUR 200	EUR 200	EUR 200	20%	EUR 40
POB 3 (Implementation)	EUR 500	EUR 500	EUR 500	30%	EUR 150
Sum	EUR 2700	EUR 2700	EUR 2700		EUR 2190

Then the contractual price and standalone selling price of performance obligation 3 are raised to EUR 600 and EUR 600 respectively. The system applies mixed change: the system calculates remaining standalone selling prices and uses them to reallocated prices of the remaining contractual price. The remaining standalone selling prices are calculated in the following way:

Table 52:

	Remaining Standalone Selling Price
POB 2 (Unit-distinct)	Standalone Selling Price * (1-Fulfillment Percentage)
POB 3 (Not Unit-distinct)	Standalone Selling Price

Remaining price is calculated in the following way:

Remaining Price = Total Contractual Price – Recognized Revenue of Unit-distinct Performance Obligation

The system redistributes the remaining price to performance obligations in proportion to their remaining standalone selling prices. The catch-up is calculated in the following way:

Catch-up= (Allocated Price-Allocated Remaining Price)*Fulfillment Percentage

The result is showed in the following table:

Table 53:

	Contractual price	SSP	Allocated Price	Fulfillment (%)	Recognized Revenue	Remaining Price	Remaining SSP	Allocated Remaining Price	Catch-up
POB 1 (Software 1)	EUR 2000	EUR 2000	EUR 2000	100%	EUR 2000		0		
POB 2 (Software 2)	EUR 200	EUR 200	EUR 200	20%	EUR 40		EUR 160	EUR 160	
POB 3 (Implementation)	EUR 600	EUR 600	EUR 600	30%	EUR 150		EUR 600	EUR 600	EUR 30
Sum	EUR 2800	EUR 2800	EUR 2800		EUR 2190	EUR760	EUR 760	EUR 760	EUR 30

7.4 Attributes Change from Inception Date

When performing contract change, you cannot only change quantity and amount, but also some attributes of a contract from its inception date, such as performance obligation type, fulfillment type, event type, and deferral method. Among those changes of attributes, there are some that will not result in price reallocation.

Table 54:

Reallocation	Changes
Yes	Deferral method, start date, SSP, Residual price allocation
No	Performance obligation type, fulfillment type, event type

7.5 Determination of Contract Change Type

As soon as the changes enter into Revenue Accounting and Reporting, the system determines types of contract change by the following steps:

Step 1: The system checks change types in regards to each accounting principle in a Customizing activity:

Choose *Financial Accounting* > *Revenue Accounting Contracts* > *Configure Accounting Principle-specific*

If you do not enable contract modification, the change will be applied with change of estimates; otherwise, the system determines change type in second step.

Step 2: The system checks change types on UI.

For performance obligations included in allocation, you can specify fiscal year, posting period, and change type; for performance obligations excluded from allocation, you can specify performance obligation ID, performance obligation name, fiscal year, posting period, and change type. The system keeps manual change no matter what is resulted from BAdI.

Step 3: The system checks change type from BAdI if only the first two steps fail to determine change type. You can find rules of BAdI in the document of BAdI: Determination of Contract Change for Performance Obligation.

> **Note**
>
> Current output of BAdI always override last one.

8 Fulfillment of Performance Obligations

Revenue Accounting manages the fulfillment statuses of performance obligations on its own. When a performance obligation qualifies as fulfilled, it is tracked as fulfilled in Revenue Accounting. The corresponding revenues and costs are then recognized in a revenue posting job, typically performed at the closing of an accounting period. Therefore, the data tracked in Revenue Accounting may be inconsistent with the general ledger until a revenue posting job is performed.

Revenue Accounting supports various calculations of performance obligation fulfillment. For example, performance obligations can be fulfilled in the following ways:

- On the occurrence of a certain event
- Over a period of time
- Over a period of time that starts with an event
- Manually managed

8.1 Event-Based Fulfillment

Use

A performance obligation can be fulfilled on the occurrence of a certain event, such as a goods issue. In this scenario, you can set the fulfillment type to *Event-Based* and define the appropriate type of event that triggers the fulfillment of the performance obligation.

Prerequisites

This system tracks fulfillment against event types that are defined in the following Customizing activity: *Financial Accounting* > *Revenue Accounting* > *Revenue Accounting Contracts* > *Define Fulfillment Event Types*

8.2 Time-Based Fulfillment

A performance obligation can be fulfilled over a period of time. That period can be specified by a start date in combination with either a length of time or an end date. The fulfillment of the performance obligation can be distributed over the duration in many ways. For example, you can fulfill the performance obligation by the end of the last accounting period of the duration. Or you can distribute the fulfillment evenly among the accounting periods within the duration.

8.2.1 Spreading

Spreading determines how the entire fulfillment of a performance obligation is distributed over the specified period of time. Revenue Accounting provides several ways of determining the spreading of a performance obligation.

Deferral Methods

Using deferral methods is one of the ways of determining how the fulfillment of a performance obligation is spread over a period of time. In the standard system, the following deferral methods are available:

Table 55:

Deferral Method	Description
Linear Distribution, Day-Specific, 365/366 Basis	The fulfillment of the performance obligation is evenly distributed over the number of days in the duration. Therefore, the revenue or cost recognized for each accounting period is in proportion to the number of days that fall in that accounting period. When you use this deferral method, the total number of days is calculated at 365 or 366 days per year, depending on whether it is a leap year.
Linear Distribution, Day-Specific, 360 Basis	The fulfillment of the performance obligation is evenly distributed over the number of days in the duration. Therefore, the revenue or cost recognized for each accounting period is in proportion to the number of days that fall in that accounting period. When you use this deferral method, the total number of days is calculated at 360 days per year.
Linear Distribution, Day-Specific, 360 Basis (with rounding adjustment)	The calculation of fulfillment is the same as the *Linear Distribution, Day-Specific, 360 Basis* method, except that it applies a different rounding calculation that makes sure that all periods other than the first and last periods have identical amounts.
Recognition in First Period	The fulfillment of the performance obligation is distributed to the first accounting period of the duration.
Recognition in End Period	The fulfillment of the performance obligation is distributed to the last accounting period of the duration.

Deferral Method	Description
Linear Distribution, Period-Specific	The fulfillment of the performance obligation is distributed over the number of accounting periods in the duration, regardless of the number of days that fall in each period. If the duration is not aligned to periods, and if the part that falls in the last period does not fill up the entire period, no part of the fulfillment is distributed to that last period.

Example scenario:

Your company sells to a customer a unit of equipment and a maintenance service that is good for three months of the delivery of the equipment. Your company delivers the equipment on January 5, 2014. You want the performance obligation for the equipment to be fulfilled immediately on delivery, and want the performance obligation for the maintenance service to be fulfilled over three months thereafter.

In this scenario, different deferral methods cause the performance obligation for the maintenance service to be fulfilled as follows:

Table 56:

Deferral Method	Description
Linear Distribution, Day-Specific, 365/366 Basis	Fulfilled for period 1 (Jan 5 – Jan 31, 27 days): 27/90 Fulfilled for period 2 (Feb 1 – Feb 28, 28 days): 28/90 Fulfilled for period 3 (Mar 1 – Mar 31, 31 days): 31/90 Fulfilled for period 4 (Apr 1 – Apr 4, 4 days): 4/90 Note: The total number of days is 90 days (27+28+31+4).
Linear Distribution, Day-Specific, 360 Basis	Fulfilled for period 1 (Jan 5 – Jan 31, 26 days): 26/90 Fulfilled for period 2 (Feb 1 – Feb 28, 30 days): 30/90 Fulfilled for period 3 (Mar 1 – Mar 31, 30 days): 30/90 Fulfilled for period 4 (Apr 1 – Apr 4, 4 days): 4/90 Note: The total number of days is 90 days (26 + 30 +30 + 4). The number of days in the first period is calculated as 30 minus the number of days not in the period (4 days in this example), down to 0. The number of days in the last period is calculated as the number of days that fall in that period (4 days in this example), up to 30.
Linear Distribution, Day-Specific, 360 Basis (with rounding adjustment)	The calculation of fulfillment is the same as the *Linear Distribution, Day-Specific, 360 Basis*"" method, except that it applies a different rounding calculation that makes sure that all periods other than the first and last periods have identical amounts.

Deferral Method	Description
Recognition in First Period	Fulfilled for period 1 (Jan 5 – Jan 31): 100% Fulfilled for period 2 (Feb 1 – Feb 28): 0 Fulfilled for period 3 (Mar 1 – Mar 31): 0 Fulfilled for period 4 (Apr 1 – Apr 4): 0
Recognition in End Period	Fulfilled for period 1 (Jan 5 – Jan 31): 0 Fulfilled for period 2 (Feb 1 – Feb 28): 0 Fulfilled for period 3 (Mar 1 – Mar 31): 0 Fulfilled for period 4 (Apr 1 – Apr 4): 100%
Linear Distribution, Period-Specific	Fulfilled for period 1 (Jan 5 – Jan 31): 1/3 Fulfilled for period 2 (Feb 1 – Feb 28): 1/3 Fulfilled for period 3 (Mar 1 – Mar 31): 1/3 Fulfilled for period 4 (Apr 1 – Apr 4): 0 Note: The part that falls in the last period (period 4) does not fill up the entire period.

Note: This example assumes that each accounting period spans from the first day to the last day of each month.

Customized Deferral Methods

You may need to spread the fulfillment in a way that is not addressed by any of the default deferral methods. The following Business Add-In (BAdI) allows you to develop your own deferral methods: *Financial Accounting (New)* > *Revenue Accounting* > *Revenue Accounting Contracts* > *Business Add-Ins*

Manual Spreading

In addition, Revenue Accounting allows you to manually arrange the fulfillment over the specified duration. In this operation, you can specify how much revenue is distributed to each accounting period within the duration. The system provides you with the spreading applied by default, and your values override the existing spreading arrangement.

The number of periods to which you allocate the time-based revenue depends on the deferral method that is assigned to the performance obligation.

For example, your performance obligation is to be fulfilled over a 3-month duration that runs across 4 accounting periods. The total revenue of that performance obligation amounts to EUR 500. If the deferral method is “Linear Distribution, Day-Specific, 360 Basis”, the system allows you to specify how this amount is split among the 4

accounting periods. If the deferral method is Linear Distribution, Period-Specific, the system allows you to specify how this amount is split among the first 3 accounting periods.

8.2.2 Duration of Fulfillment

The duration over which a performance obligation is fulfilled is determined by combinations of start date, end date, and duration.

Start Date

This specifies the start date of the duration over which the performance obligation is to be fulfilled.

End Date

This specifies the end date of the duration over which the performance obligation is to be fulfilled.

Duration

This specifies the length of the period during which the performance obligation is to be fulfilled.

Start Date Type

When the back-end operational system requests the creation of a time-based performance obligation, it can specify how the start date is determined by using the *Start Date Type* attribute.

- *1 - Available on Creation of Performance Obligation*
  This indicates that the start date must be specified when the performance obligation is created. The system issues an error message if the start date is missing.
- *2 - Available After Creation of Performance Obligation*
  This indicates that the start date does not have to be specified when the performance obligation is created. Until the start date is specified later, the fulfillment of the performance obligation does not proceed.
- *3 - Is Always the Event Date*
  This option allows for two scenarios. If the performance obligation is a linked performance obligation, the start date of the duration is always the date of the fulfillment event that occurs on its leading performance obligation. If the performance obligation is not a linked performance obligation but its time-based fulfillment starts from an event that occurs on that performance obligation, the start date is always the date of its own fulfillment event.

Scenarios

The following scenarios are typical scenarios with different combinations of start date, end date, duration, and start date type.

Table 57:

Scenario	Start Date	End Date	Duration	Start Date Type	Description
1	x	x		1	Fulfilled over a period, starting from a specified date to a specified date.
2	x		x	1	Fulfilled over a period of a specified length, starting from a specified date
3				2	Fulfilled over a period that cannot be determined at the time of contract creation.
4			x	3	Fulfilled over a period of a specified length. The fulfillment starts from the occurrence of an event.
5		x		3	Fulfilled over a period that ends on a specific date, with its start date to be specified later. This scenario is rare. Unless customized otherwise, the system by default issues a warning when the back-end system requests the creation of such a performance obligation.

8.3 Fulfillment by Percentage of Completion

Use

Your contracts with customers may involve a project to which quantities do not apply. The revenue is recognized according to the percentage of the project that has been completed. In this scenario, you can fulfill relevant performance obligations by percentage of completion. This scenario requires the following configurations on the performance obligations:

- Fulfillment type: *Percentage of Completion*
- Event type: *Manual*

To fulfill a performance obligation of this kind, the accountant manually enters the progress into the Revenue Accounting system by specifying the percentage that has been completed.

More Information

For more information about manual fulfillment, see Manual Fulfillment [page 105].

8.4 Manual Fulfillment

Use

Certain business scenarios require that performance obligations can only be fulfilled manually. For example, the revenue can be recognized only when the company receives a confirmation letter from the customer.

Manual fulfillment of performance obligations is also a type of event-based fulfillment. The only difference is that the fulfillment is not automatically triggered by incoming events. Instead, the accountant manually specifies how much of a performance obligation is delivered. The system then calculates how much of that performance obligation is actually fulfilled, based on its dependency on other performance obligations.

Prerequisites

For a performance obligation to be fulfilled manually, the following settings are required:

- The fulfillment type is either event-based (E) or the percentage of completion (O).
- The event type is *Manual* (MA).

Even though you can define your own event types that progress performance obligations toward their fulfillment, *Manual* (MA) is a pre-delivered event type that indicates that the performance obligation is to be fulfilled manually.

Features

- **Manual fulfillment at contract level**
  You can manually fulfill performance obligations across multiple revenue accounting contracts at the same time. The search function allows you to find contracts that contain performance obligations to be manually fulfilled. When you select multiple contracts to be fulfilled, the system fulfills the relevant performance obligations in those contracts to 100%. The system only processes performance obligations that require manual fulfillment, ignoring performance obligations that do not require manual fulfillment.
- **Manual Fulfillment at performance obligation level**
  You can fulfill a specific performance obligation by a specified quantity. For example, this allows you to manually report a delivery for a performance obligation. You manually specify how much of a performance obligation is delivered, and the system then calculates how much of that performance obligation is actually fulfilled, based on its dependency on other performance obligations. In this case, the actually fulfilled quantity is simulated before the change is saved.
  Depending on the fulfillment type, either a quantity or a percentage of completion can be specified.
- **Reverse fulfillment**
  For a performance obligation, you can perform a reverse fulfillment to deduct a quantity from the completely fulfilled quantity. For example, you can use this feature to report a goods return. When you specify a negative number as the quantity to be delivered, the system assumes that you are performing a reverse fulfillment.

9 Revenue Posting

Use

The Revenue Accounting system manages revenue recognition by using objects like revenue accounting contracts and performance obligations. The system receives events that relate to revenue recognition and tracks the fulfillment of performance obligations. However, revenue postings are not made at the times of those events. The accountant performs revenue posting jobs regularly to post FI documents to the general ledger. Before the postings are made, the account can choose to perform the calculation of time-based revenue, contract liabilities, and contract assets. For example, after calculating time-based revenue, contract liabilities, and contract assets, the accountant can perform a revenue posting run at the end of each accounting period to transfer revenue recognition transactions to the general ledger.

Prerequisites

To enable revenue postings, you need to perform the following Customizing activities:

- You have defined accounting principles and enabled company codes for Revenue Accounting.
  Choose *Financial Accounting* > *Revenue Accounting* > *Revenue Accounting Contracts* > *Configure Accounting Principle-Specific Settings*.
- You have configured parallel processing for the posting of revenue.
  Choose *Financial Accounting* > *Revenue Accounting* > *Revenue Accounting Postings* > *Configure Parallel Processing for Revenue Posting*.
- You have defined the transfer account, posting keys, document type, and account assignments.
  Choose *Financial Accounting* > *Revenue Accounting* > *Revenue Accounting Postings* > *Define Posting Specifications for General Ledger Transfer*.

  > **Note**
  >
  > Unless otherwise specified in this Customizing activity, the system uses by default **SA** as the document type, **40** as the debit posting key, and **50** as the credit posting key.

- You have configured account determination.
  Choose *Financial Accounting* > *Revenue Accounting* > *Revenue Accounting Postings* > *Configure Account Determination for Specific Transactions*.

Features

Revenue Posting in Three Steps

You can perform a revenue posting in three steps:

- Calculate time-based revenue
- Calculate contract liabilities and assets
- Perform revenue posting run

Before you make actual postings, you need to calculate all data and transfer it to a posting table, which can be regarded as a sub-ledger in the accounting engine. You can also perform the calculation and transfer of time-based revenue, contract liabilities, and contract assets separately.

Posting by Accounting Period

You can post revenue for one accounting period at a time. Before the posting, you must make sure that the period is open or in closing.

Posting for Individual Contracts

In each of the three programs for revenue posting, you can select individual revenue accounting contracts for processing.

Simulation Mode

The system allows you to simulate a posting job in simulation mode. You can use the simulated results to verify the account determination, account assignments, debit/credit side, and posting amounts.

In simulation mode, the system performs some basic checks. For example, the system checks whether the selected company codes exist in the simulation mode. However, it does not check against issues that can only be detected while the job is running. The result of simulation can be displayed by account, performance obligations, or posting.

Test Mode

The system allows you to test postings in background jobs to detect any possible posting errors. You can specify company code, accounting principle, fiscal year, posting period, revenue accounting contract, and obligation performance to perform the testing.

Choose *Revenue Posting Run* > *Revenue Posting Run* > *Run Mode* > *Test Only*

Running as Background Jobs

The system can run three background jobs:

- Calculation of Time-Based Revenue
- Calculation Contract Liabilities and Assets
- Revenue Posting Run

. After the jobs have been completed, the job monitor displays the results of the three jobs to indicate whether they have been successful.

You can monitor the status of the three jobs, such as run ID, planned start date/time, start date/time, and end date/time. The results of posting jobs can be displayed by different statuses, such as in process, scheduled, canceled, and finished. Also, the results can be showed by categories of time-based revenue calculation, contract liabilities and assets calculation, revenue posting, and reverse posting. You can view the job details of the posting jobs, such as application log, search criteria, and message list.

Posting Optimization

To avoid system dump when data volume is overwhelmingly large, the system can optimize posting by dividing the data into batches. You can enable the posting optimization in the following Customizing activity:

Choose *Financial Accounting* > *Revenue Accounting* > *Revenue Accounting Postings* > *Switch on Posting Optimization*

Scheduling

To run the posting job once, you can schedule it to run either immediately or at a specified time, using the options provided in the revenue posting user interfaces. For a scheduled posting job, the system performs basic checks on your posting options to prevent you from running a job that will eventually fail. However, it does not check against issues that can only be detected while the job is running.

The revenue posting user interfaces do not provide options for you to schedule a recurring job. However, the three programs for revenue posting are all available in ABAP programs. The ABAP programs provide more flexibility, and you can schedule recurring jobs for these ABAP programs by using the ABAP built-in scheduling framework. For more information, see Start a Revenue Posting Run [page 115].

Specifying Posting Date

You are prompted to specify a posting date for the posting job. The specified date must fall in the accounting period.

Posting Check

When you start a revenue posting job, the system checks all selected contracts one by one and then performs revenue postings. Those contracts that are posted successfully are entered into the general ledger while those contracts with errors are skipped.

Support of General Ledger Accounting (New)

If you have activated General Ledger Accounting (new), all postings are made to the relevant ledger group, depending on the accounting principle.

Line Item Aggregation and Splitting

To reduce the total number of line items in the posted documents, the system aggregates line items by a combination of several fields, such as G/L account, account assignment attributes, and condition type. Therefore, line items that have identical values for all these fields are merged into one line item.

In some rare scenarios, the amount of a single line item exceeds 99,999,999,999. In this case, the system splits the line item into several line items.

FI Document Splitting

Typically, the system creates one FI document for each posting job. However, the system splits the document into several documents in the following scenarios:

- More than 900 line items are to be included.
- The transactions to be posted involve different document currencies.

Handling Tax Codes

Revenue-related postings are not relevant to input and output taxes. Even if the posting involves an account that is defined as tax-related, the system just ignores it.

Including Account Assignment Data

You can include account assignment data (segment, profit center, business area, and functional area) in FI documents posted to the general ledger. This can be customized at the company code level in the following Customizing activity:

Choose *Financial Accounting* > *Revenue Accounting* > *Revenue Accounting Postings* > *Define Posting Specifications for General Ledger Transfer*.

Reversal

You can reverse the postings made by a previous revenue posting job. Since the reversal is based on *Run ID* and *Run ID* is generated based on a whole revenue posting, you will reverse all the posted contracts in the previous revenue posting job.

Navigation to Original Document from FI Document

The revenue posting will aggregate the contracts and performance obligation line items that are to be posted into one general ledger document. The 'Original Document' from the revenue postings is a group of revenue contracts and performance obligations. The report *FI Documents: By Contract* can display the group situation of revenue contracts and performance obligations from *Revenue Posting Run*.

You can now view the original documents. The system will navigate to the report *FI Documents: By Contract*. The related company code, accounting principle, fiscal year, posting period and general ledger document number will be transported to the selection criteria of the report and the report is executed automatically.

In the transaction for *Display FI Document: FB03*, choose *Environment* > *Document Environment* > *Original Document*

Reconciliation Key

The system allows you to generate a reconciliation key at contract level so that revenue can be posted at various levels of granularity. You can use a reconciliation key to reconcile postings between the general ledger and revenue accounting. For example, you can post revenue to the general ledger from revenue accounting using a reconciliation key.

The reconciliation key consists of 14 digits that represent the fiscal year (4 digits), posting period (3 digits), and series number (7 digits). It has the following statuses:

- 'M' (Migration) This status can only be used in migration.
- 'O' (Open) This status is used to mark any action in revenue accounting, such as creating a contract, fulfilling a performance obligation, and combining contracts.
- 'P' (Transferred) This status is used when the *Transfer Revenue* program has been executed.
- 'F' (Failed) This status is used when the system fails to post entries to FI.
- 'C' (Closed) This status is used when the revenue posting program has been performed successfully.
- 'S' (Simulation) This status is used when the posting simulation has been performed.
- 'A' (Canceled) This status is used when a posting has been reversed.
- 'R' (Replaced) This status is used when contracts have been shifted to the next period.

> **Note**
>
> The status "R" can only be requested when a posting fails.

Activities

You can perform the following accounting tasks:

- Schedule a revenue posting job to run immediately
- Schedule a revenue posting job to run later
- Simulate a revenue posting job
- Monitor the statuses of revenue posting jobs and tasks
- Review the results of revenue posting jobs
- View the posted documents of a revenue posting job
- Reverse the postings made by a previous revenue posting job

9.1 Revenue Posting in Three Steps

The general task of revenue posting is divided into three steps. The accountant runs three separate programs to perform these steps.

Table 58:

Program Name	Description	Frequency	Simulation Available	Granularity
Calculate Time-Based Revenue	This program prepares the data required for a subsequent revenue posting run. The program processes transactions and events that occurred for time-based performance obligations and calculates revenue for time-based performance obligations. Before an actual revenue posting run is performed, this program calculates and transfers all revenue for time-based performance obligations to a posting table, which is regarded as a subledger in the revenue accounting engine.	Usually daily, depending on data volume. You can schedule a recurring job for this task.	No	You can select specific revenue accounting contracts.

Program Name	Description	Frequency	Simulation Available	Granularity
Calculate Contract Liabilities and Assets	This program prepares the data required for a subsequent revenue posting run. The program calculates contract liabilities and contract assets. The contract liabilities and assets to be posted are pre-staged in the posting table in the Revenue Accounting component so that they can be transferred to the target ledgers in a revenue posting run.	Usually daily, depending on data volume. You can schedule a recurring job for this task.	No	You can select specific revenue accounting contracts.
Revenue Posting Run	This program transfers revenue postings to the general ledger and other corresponding ledgers.	Regularly. For example, at the end of the period. Attention always needs to be paid to data volume.	Yes. Among other search criteria, the user can select specific contracts to simulate.	You can select specific revenue accounting contracts.

Background Programs

In addition to the Web interfaces available in the NetWeaver Business Client, the three steps can also be performed using ABAP programs and assigned with transaction codes. The ABAP programs provide the same functions as in the Web interfaces, providing technical users with more flexibility. The following table lists the details:

Table 59:

Program Name	ABAP Program	Transaction Code
Calculate Time-Based Revenue	`FARR_TIME_BASED_TRANSFER`	`FARR_TM_TRANSFE`
Calculate Contract Liabilities and Assets	`FARR_CONTRACT_LIABILITY`	`FARR_LIABILITY_CALC`
Revenue Posting Run	`FARR_REVENUE_POSTING`	`FARR_REV_POST`

9.2 Calculation and Distribution of Contract Liability/Asset or Unbilled Receivable/Deferred Revenue

9.2.1 Calculation of Contract Liability and Asset

Revenue Accounting and Reporting can calculate the following two pairs in backend system:

- Contract liability and asset
- Unbillable receivable and deferred revenue

Contract liability and asset are calculated when invoice due date is applied; unbillable receivable and deferred revenue are calculated when invoice date is applied. You can configure the setting in the following Customizing activity:

Choose *Financial Accounting (New)* > *Revenue Accounting* > *Revenue Accounting Contracts* > *Configure Accounting Principle-specific Settings*.

The calculation is performed at performance obligation level. It takes the following steps:

Step 1: Calculate balance of contract liabilities and contract assets per performance obligation according to the following formulas:

- `Contract Liability = Max {(payment due - fulfilled revenue), 0}`
- `Contract Asset = Max {(Fulfilled Revenue - Receivable), 0}`
- `Receivable = Max {Billable Amount, Invoice due amount}`
- `Billable Amount = Original Amount * Fulfillment Revenue/Total Allocated Revenue`

Step 2: Sum up the balance of contract liabilities and assets on each performance obligation and get contract liabilities and assets on contract level.

Contract liability and asset are required by the International Financial Reporting Standard (IFRS 15), nevertheless, customers may also need to disclosure and post the following accounts for local GAAP requirements such as US GAAP:

- Unbilled Revenue: This revenue has been recognized but not billed yet. The difference between unbilled revenue and contract asset is that: Unbilled Revenue calculation always compares the invoiced amount with the revenue while contract asset calculation compares the billable amount with the revenue.
- Deferred Revenue: The invoice amount has been issued to customer but cannot be recognized as revenue. The difference between deferred revenue and contract liability is that: Contract liability compares the invoiced due amount with revenue while deferred revenue compares the invoice amount with the revenue.

They are calculated according the following formulas:

- Unbilled Revenue per performance obligation = Max {(Recognized Revenue – Invoiced amount), 0}
- Deferred Revenue per performance obligation = Max {(Invoiced Amount – Recognized Revenue), 0}

9.2.2 Distributing Contract Liability and Asset to Performance Obligation Level

Use

The calculation result of contract liability and asset (unbillable receivable and deferred revenue) can be posted either at performance obligation or contract level. You can configure the setting in the following Customizing activity:

Choose *Financial Accounting (New)* > *Revenue Accounting* > *Revenue Accounting Contracts* > *Configure Accounting Principle-specific Settings*.

If contract liability and asset have been calculated at contract level, you can also distribute to performance obligation level by implementing BAdI: Distributing Contr. Liab./Ass. and Deferred/Unbilled into POB level. By default, the BAdI distributes contract liability and asset as follows:

Step 1: The system divides all performance obligations into the following two types:

- Sending type
  For a performance obligations of this type, its allocated price is less than transactional price.
- Receiving type
  For a performance obligation of this type, its allocated price is more than transaction price.

Step 2: Invoices of sending type performance obligations are split to the following two parts:

- Retained invoice value
  `Retained invoice amount = invoice * allocated amount / transaction amount`
- Distributed invoice value
  `Distributed invoice = invoice - retained invoice`

Step 3: Distributed invoice value is added to receiving type performance obligations. If there are several receiving performance obligations, distributed invoice amount is added to each receiving performance obligation in proportion to their respective CORR value.

Step 4: The system uses reallocated revenue and invoice to calculate contract liability and asset at performance obligation level.

Example

There are four performance obligations in a contract. Performance obligation 1 and 2 are sending performance obligations; performance obligation 3 and 4 are receiving performance obligations.

Table 60:

	POB	Transaction Amount	SSP	Allocated Amount	Invoice Amount	Retained Invoice	Distributed Invoice	Reassigned Invoice
Sending POBs	POB 1	EUR 1000	EUR 700	EUR 700	EUR 70	EUR 49=70*700 /10	EUR 21	EUR 49=70-21
	POB2	EUR 200	EUR 200	EUR 200	EUR 20	EUR 20	0	EUR 20
Receiving POBs	POB 3	EUR 200	EUR 400	EUR 400	EUR 30			EUR 44
	POB4	EUR 200	EUR 300	EUR 300	EUR 40			EUR 47

> **Note**
>
> In the table, POB refers to performance obligation and SSP to Standalone Selling Price.

Unbillable receivable and deferred revenue at performance obligation is distributed in the same way.

9.3 Start a Revenue Posting Run

Proceed as follows:

1. In the NetWeaver Business Client, select a role that allows you to perform revenue accounting tasks.
2. Choose *Revenue Posting Run* > *Revenue Posting Run*.
3. If you want to simulate posting jobs before making any actual postings, you can perform the simulation with data in the *Company Code*, *Accounting Principle*, *Fiscal Year*, *Posting Period*, *Revenue Accounting Contract*, and *Obligation Performance* fields. You can display the results using the options *By Account*, *By Performance Obligations*, or *By Posting*.

   > **Note**
   >
   > - With the *By Account* option, you display simulated data by G/L account.
   > - With the *By Performance Obligations* option, you display simulated results by revenue accounting contract and performance obligation.
   > - With the *By Posting* option, you display simulated results by posting pair (debit and credit) .

4. Choose *Switch to Posting Mode* to switch to the posting mode
5. Enter company codes for which you want to perform revenue postings.

   > **Note**
   >
   > - You can add additional search criteria to select multiple company codes.
   > - You can also select a range of company codes. The system interprets ranges of company codes on an alphanumeric basis. For example, if you use the *Is Between* operator and enter **A000** and **A099**, the posting job includes company codes A000 through A099.

6. Enter a fiscal year and a posting period. You can perform revenue postings for only one period at a time. Make sure the revenue accounting period is open or in closing.
7. Enter a fiscal year and a posting period. Make sure the revenue accounting period that you enter is open or in closing. You can perform revenue postings for only one period at a time.
8. You can use the *Contract* search criterion to specify the contracts for which you want to make revenue postings.
9. When the *Posting Check* indicator is selected, the program checks the contracts one by one to verify the possibility of making a revenue posting for that contract. If any contract fails the check, that contract is skipped in the actual postings. When the *Posting Check* indicator is not selected and any contract fails the check, all the contracts are skipped in the actual postings.
10. To close the revenue accounting period when the posting is complete, select the *Close Period for Rev* option. Refer to Revenue Accounting Close [page 128] for more information.
11. In the *Job Name* text box, enter a job name that describes the current posting job.
12. Enter a posting date. The posting date must fall in the posting period that you have selected.
13. By using the *Posting Mode* setting, you can choose to perform the actual posting or only simulate the posting.

    > **Note**
    >
    > If you choose the *Test Only* option, the system simulates the posting to detect any possible posting error in a background job. You can see the result of the test in job monitor. The result includes posting errors and their reasons. However, if you choose *Switch to Simulation Mode* and run a simulation posting in the same page, the simulation runs in online mode. Since simulation mode is run online, the UI session may time out and the simulation may fail if the simulation posting involves large volumes of data.

14. To execute the run immediately, choose *Schedule to Start Immediately*.
15. The *Number of Intervals* option is a technical parameter that controls the parallel processing of the posting job. In most scenarios, you can leave the default value.

    > **Note**
    >
    > This setting sets the number of parallel jobs that the system runs to perform revenue postings. For systems that have large numbers of processing units, you can increase the value to improve performance.

16. Choose *Post*.

9.4 Job Monitor

The system can run three background jobs:

- Transfer Revenue
- Calculate Contract Liability and Contract Asset
- Revenue Posting Run

After the jobs have been completed, the job monitor displays the results of the three jobs to indicate whether they have been successful.

You can monitor the status of the three jobs, such as run ID, planned start date/time, and end date/time. The results of the jobs are displayed with different statuses, such as *In Process*, *Scheduled*, *Canceled*, and *Finished*.

The results can also be displayed according to the job categories *Revenue Transfer*, *Calculate Contract Liabilities and Contract Assets*, *Revenue Posting*, and *Reverse Posting and Reposting*. You can view the job details of the posting jobs, such as the application log, search criteria, and message list.

Features

Job List Block

This block is used to display the basic job information for (*Revenue Transfer*, *Calculate Liability and Asset*, *Revenue Posting*, *Revenue Posting Reversal* and *Revenue Posting Repost*).

The status of the jobs is determined according to the status of the main and all sub jobs, the parallel processing and the application log. The status of an existing job entry in the job list will only be set to green if all three statuses are highlighted in green.

With this functionality, you can also:

- delete the selected job entry.
- refresh all data in the job list.
- select which type of jobs will be displayed.
- navigate to the reconciliation reports *FI documents* and *Revenue Accounting Contracts*.

Job Detail Block

Parallel Processing Status

This block is used to display the basic information (status, description, name and number) of the parallel processing job that is started by one of the jobs. If the parallel processing job is successfully completed, the *Parallel Processing Status* icon is set to green. If the icon is set to red, it means that a dump occurred in one of the subordinate processes.

Application Log

The application log is used to show the status of the main and subordinate jobs, and displays the processing of jobs, all success messages or error messages.

There are two types of log: *Main Logs* and *Subordinate Logs*. The Main Logs show the information of the Main Job, while the Subordinate Logs show the information of the Subordinate Jobs.

Each log entry has an icon which indicates the status of the log:

- If an error message is displayed, the icon of the relevant log entry is set to red.
- If no error message is displayed but there is a warning message, the icon of the relevant log entry is set to red.
- If no error message or warning message is displayed, the icon of the relevant log entry is set to green.

Application log messages

When you click on a specific log entry, a list of messages will be shown in the *Message List* field. You can click on the *Long Text Information* link to see the long text of this log.

Search Criteria

This list is used to show the selection criteria of the specific job selected from the *Job List* block.

G/L Documents

This tab is used to show the information of the G/L Documents. If the *Revenue Posting* job or *Revenue Posting Reverse* job finished successfully, one or more G/L Documents will be created.

All Documents

This tab contains the list of accounting document types created by the *Revenue Posting* job or *Revenue Posting Reverse* Job.

When you click the *Run ID* button, a window will appear containing the *Accounting Documents* list. If the list contains multiple reference keys, the *Accounting Documents* list will consist of reference keys, in this case, on top of the reference key list. The *Filter* button is used to filter the reference keys by contract ID. If the reference key is found for the contract, you can click on the reference key to navigate to the document or document list pop-up window.

When you click the *Reversal* or *Repost* button, you can automatically navigate to the *Reversal* program or *Repost* program using all of the related parameters (company code, accounting principle, fiscal year, posting period, run ID and reversed run ID).

9.5 Revenue Posting Reversal

You can reverse the documents that are generated by a previous *Posting* job (*Revenue Posting* and *Revenue Repost*). As the reversal is based on the *Run ID*, you will reverse all of the posted contracts of the previous revenue posting job.

The *Run ID* is generated based on a full revenue posting.

Features

Search Criteria

- Company code (required): You can only choose one company code.
- Accounting principle (required): You can only choose one accounting principle.
- Fiscal year and period (required): You can run this report for only one period at a time.
- Run ID: You can run this report for only one*Run ID* at a time.

Activities

- You can navigate to the *Revenue Posting Jobs Monitor* to check the relevant job information by clicking the *Run ID*.
- You can navigate to the *Document Overview - Display* to check all of the documents generated by the previous *Posting* job (*Revenue Posting* and *Revenue Repost*) by clicking the *G/L documents* link in the results list.
- The *Reverse* function is triggered when you press the *Reverse* button.

9.6 Account Determination

Use

Revenue Accounting allows you to specify the accounts that are used for the revenue postings made to the general ledger.

Features

Account Determination Rules

You can define rules for determining the accounts used for posting certain transactions. Your rules can use certain fields as the input, such as accounting principle and company code, to determine which G/L account to use for each specific transaction. The rules then output the account that is to be used.

- Evaluation Order
  You can define multiple rules for determining an account. The system evaluates the rules from the top down. Once the system finds a rule that returns an account, it does not continue to evaluate other rules.
- Required Fields
  Certain fields are required when you choose the input fields for determining the account. For example, for determining the Receivable Adjustment account, the accounting principle and company code fields are required. Therefore, you have to specify an account for each combination of an accounting principle and a company code.
- Copying the Reference Account
  You can configure the rule to copy the reference account by setting the derived account to * (asterisk). Such a rule indicates that the derived account is the same as the reference account if the rule matches the specified criteria.

Reference Accounts

For each revenue-related posting, the system provides a reference account as the starting point of the account determination process. The reference account is provided as the input of your determination rules. This account usually comes from outside Revenue Accounting and varies depending on the type of account that needs to be determined. For example, when determining the account of the Receivable Adjustment account, the system uses the Accounts Receivable account (defined in the master data of the customer record) as the reference account, so your determination rules can use that account to derive the account that will eventually be used. Your rules can disregard the reference account and use other fields as the criteria.

G/L Accounts and Determination Settings

The following table lists the G/L accounts to be determined and the settings that determine these accounts.

Table 61:

Account	Reference Account	Remarks
Recognized Revenue	The Billed Revenue account. This is the source account on the main pricing condition. **Note** • Each condition passed from the logistics system contains a source account and a target account. These two accounts are determined by the account determination of the logistics system. • The price of an item can be aggregated from multiple pricing conditions. Only one of the conditions is marked as the main condition.	This is determined by the rules in the **Recognized Revenue** section.
Receivable Adjustment	The Accounts Receivable account. The Accounts Receivable account can be determined in the corresponding revenue accounting items (RAI) and included as a field when creating performance obligations. The system performs a check to make sure that all performance obligations in a contract must reference the same Accounts Receivable account. The error handling of this check can be customized in the Message Control Customizing activity. If the Accounts Receivable account is not specified on any of the performance obligations in the contract, the system then uses the reconciliation account defined in the company code segment of the customer master record.	This is determined by the rules in the **Receivable Adjustment** section.
Revenue Adjustment	The Recognized Revenue account. This is the account determined by the rules in the **Recognized Revenue** section.	This is determined by the rules in the **Revenue Adjustment for Allocation Effect** section. You must define rules for determining the target account for each accounting principle.

Account	Reference Account	Remarks
Recognized Revenue (for Linked Performance Obligations)	The Recognized Revenue account determined for its leading performance obligation. This is the account determined by the rules in the **Recognized Revenue** section.	This is determined by the rules in the **Revenue Adjustment for Linked Performance Obligations** section.
Revenue Adjustment for Right of Return	The Recognized Revenue account. This is the account determined by the rules in the **Recognized Revenue** section.	This is determined by the rules in the **Right of Return** section that have an Account Category of **Revenue Adjustment**.
Refund Liability	The Recognized Revenue account. This is the account determined by the rules in the **Recognized Revenue** section.	This is determined by the rules in the **Right of Return** section that have an Account Category of **Refund Liability**.
Deferred Revenue	The Recognized Revenue account determined for its leading performance obligation. This is the account determined by the rules in the **Recognized Revenue** section.	This is determined by the rules in the **Deferred Revenue** section.
Unbilled Receivable	The Accounts Receivable account. The Accounts Receivable account can be determined in the corresponding revenue accounting items (RAI) and included as a field when creating performance obligations. The system performs a check to make sure that all performance obligations in a contract must reference the same Accounts Receivable account. The error handling of this check can be customized in the Message Control Customizing activity. If the Accounts Receivable account is not specified on any of the performance obligations in the contract, the system then uses the reconciliation account defined in the company code segment of the customer master record.	This is determined by the rules in the **Deferred Revenue** section.

Account	Reference Account	Remarks
Contract Liability	The Accounts Receivable account. The Accounts Receivable account can be determined in the corresponding revenue accounting items (RAI) and included as a field when creating performance obligations. The system performs a check to make sure that all performance obligations in a contract must reference the same Accounts Receivable account. The error handling of this check can be customized in the Message Control Customizing activity. If the Accounts Receivable account is not specified on any of the performance obligations in the contract, the system then uses the reconciliation account defined in the company code segment of the customer master record.	This is determined by the rules in the **Contract Liability** section.
Contract Asset	The Accounts Receivable account. The Accounts Receivable account can be determined in the corresponding revenue accounting items (RAI) and included as a field when creating performance obligations. The system performs a check to make sure that all performance obligations in a contract must reference the same Accounts Receivable account. The error handling of this check can be customized in the Message Control Customizing activity. If the Accounts Receivable account is not specified on any of the performance obligations in the contract, the system then uses the reconciliation account defined in the company code segment of the customer master record.	This is determined by the rules in the **Contract Asset** section.

Note

Cost recognition is currently not supported. Accounts that you specify on certain cost-related rules have no effect in revenue posting, such as:

- Lines in the *Deferred Cost* section
- Lines in the *Recognized Cost* section
- Lines that have an Account Category of *COGS Adjustment for Right of Return* in the *Right of Return* section

- Lines that have an Account Category of *Refund Asset* in the *Right of Return* section

Account Determination Configuration Tool

Revenue Accounting uses Business Rule Framework Plus (BRF+) to process account determination. However, you do not have to handles objects directly in BRF+. A tool is available in the following Customizing activity:

Revenue Accounting > *Revenue Accounting Postings* > *Configure Account Determination for Specific Transactions*

> **Note**
>
> - The tool allows you to copy and paste rules.
> - Complex expressions supported in BRF+, such as the Greater Than operator, are not supported in this tool. If you have defined lines with complex expressions, the tool skips those lines when displaying rules. However, those lines still exist in the back-end BRF+ and are always evaluated as valid rules. In this case, the display in the tool is not consistent with the actual rules in the back-end BRF+.

Reprocessing Account Determination

The system allows you to reprocess account determination to retrieve the accounts depending on the latest account determination settings. You can either open specific contracts and start account determination reprocessing for that contract, or search for specific contracts and select multiple contracts to reprocess.

> **Note**
>
> Re-determination of balance sheet accounts is not allowed after corresponding FI documents are created.

9.7 Revenue-Related Events and Postings

The following section lists the activities that involve revenue postings, typical postings that are made outside Revenue Accounting for those activities, and corresponding corrective postings made by Revenue Accounting.

> **Note**
>
> Cost recognition is not currently supported by Revenue Accounting and Reporting. The system does not make cost-related postings.

When an invoice is issued:

Table 62:

Posting Made By	Posting
The logistics system	Dr: Accounts Receivable Cr: Billed Revenue

Posting Made By	Posting
	(For price discounts) Dr: Billed Revenue Cr: Accounts Receivable
Revenue Accounting	Dr: Recognized Revenue Cr: Receivable Adjustment
	(For price discounts) Dr: Receivable Adjustment Cr: Recognized Revenue

When a goods issue is created:

Table 63:

Posting Made By	Posting
The logistics system	Dr: Cost of Goods Sold Cr: Inventory

To recognize revenue when a (non-linked) performance obligation is fulfilled:

Table 64:

Posting Made By	Posting
Revenue Accounting	Dr: Receivable Adjustment Cr: Recognized Revenue
	(For price discounts) Dr: Recognized Revenue Cr: Receivable Adjustment

To recognize revenue when a linked performance obligation is fulfilled:

Table 65:

Posting Made By	Posting
Revenue Accounting	Dr: Receivable Adjustment Cr: Recognized Revenue (for Linked Performance Obligations)

To recognize the differential resulting from price re-allocation when a (non-linked) performance obligation is fulfilled:

Table 66:

Posting Made By	Posting
Revenue Accounting	Dr: Receivable Adjustment Cr: Revenue Adjustment

To recognize a right of return when a performance obligation is fulfilled:

Table 67:

Posting Made By	Posting
Revenue Accounting	Dr: Revenue Adjustment for Right of Return Cr: Refund Liability

To recognize expiration of a right of return:

Table 68:

Posting Made By	Posting
Revenue Accounting	Dr: Refund Liability Cr: Revenue Adjustment for Right of Return

To recognize contract liabilities at the close of the accounting period if the invoice due amount is positive (according to invoice due date-based calculation):

Table 69:

Posting Made By	Posting
Revenue Accounting	Dr: Receivable Adjustment Cr: Contract Liability

When revenue is recognized and the contract still has a balance in contract liability (according to invoice due date-based calculation):

Table 70:

Posting Made By	Posting
Revenue Accounting	Dr: Contract Liability Cr: Receivable Adjustment

To recognize contract assets at the close of the accounting period if the recognized revenue exceeds the invoice amount or the billable amount (according to invoice due date-based calculation):

Table 71:

Posting Made By	Posting
Revenue Accounting	Dr: Contract Asset Cr: Receivable Adjustment

At the close of the accounting period if the contract still has a balance in contract asset and the invoice is issued (according to invoice due date-based calculation):

Table 72:

Posting Made By	Posting
Revenue Accounting	Dr. Receivable Adjustment Cr. Contract Asset

At the close of the accounting period if the total recognized revenue exceeds the total invoiced amount up to this period for that contract (according to invoice date-based calculation):

Table 73:

Posting Made By	Posting
Revenue Accounting	Dr. Unbilled Receivable Cr. Receivable Adjustment Note: The amount in excess of the total invoiced amount is posted as Unbilled Receivable.

At the close of the accounting period if the total invoiced amount exceeds the total recognized revenue within this period and the balance is positive on the debit side of Unbilled Receivable (according to invoice due date-based calculation):

Table 74:

Posting Made By	Posting
Revenue Accounting	Dr. Receivable Adjustment Cr. Unbilled Receivable Note: The debit side of Unbilled Receivable is cleared.

At the close of the accounting period if the total invoiced amount exceeds the total recognized revenue up to this period for that contract (according to invoice due date-based calculation):

Table 75:

Posting Made By	Posting
Revenue Accounting	Dr. Receivable Adjustment Cr. Deferred Revenue Note: The amount in excess of the recognized revenue is posted as Deferred Revenue.

At the close of the accounting period if the total recognized revenue exceeds the total invoiced amount within this period and the balance is positive on the credit side of Deferred Revenue:

Table 76:

Posting Made By	Posting
Revenue Accounting	Dr. Deferred Revenue Cr. Receivable Adjustment Note: The credit side of Deferred Revenue is cleared.

If the contract involves foreign currencies and the balance of the Receivable Adjustment account is changed as a result of postings made to certain accounts (such as the Recognized Revenue, Contract Liability, Contract Asset, and other accounts involved in invoicing), the exchange difference is posted as follows:

If the Receivable Adjustment account has a positive balance on the credit side:

Table 77:

Posting Made By	Posting
Revenue Accounting	Dr. Receivable Adjustment Cr. Gain from Exchange Rate Difference

If the Receivable Adjustment account has a positive balance on the debit side:

Table 78:

Posting Made By	Posting
Revenue Accounting	Dr. Loss from Exchange Rate Difference Cr. Receivable Adjustment

> **Note**
>
> The Exchange Rate Difference account is configured in transaction `OB09`.

9.8 Revenue Accounting Close

Use

In addition to the functions for opening and closing posting periods provided in FI, Revenue Accounting provides you with a revenue accounting level of control for your posting periods. After the accountant completes revenue postings for an accounting period, including the posting of contract liabilities and assets, the accountant can mark that period as closed so that new revenue-related transactions can be posted to the next open period.

This feature addresses certain issues occurring when an FI posting period is open but certain revenue-related accounts are closed for that period. In such cases, without a revenue accounting level of control, Revenue Accounting would assume that the revenue postings for that period can proceed, thereby creating certain posting entries that are missing in those closed accounts.

Prerequisites

- Before you close any future revenue accounting periods, make sure that all the reconciliation keys in those closing periods are closed and that the calculations of contract liabilities, contract asset, and time-based revenue are completed.
- Before you open any past revenue accounting periods, make sure that there are no reconciliation keys to be shifted from an opened period to the current period.
  For example, if you open period 05 when the current period is 07, then make sure there is no reconciliation key to be shifted from 05 to 07.

Features

Statuses of revenue accounting periods

Revenue accounting periods can have one of the following statuses:

Table 79:

Status	Description
Open	All transactions, such as goods issues, time-based revenue calculations, contract liability and asset calculations, can request new reconciliation keys for the current period. Therefore, these transactions are ready to be posted to the current period.

Status	Description
In-Closing	New transactions cannot request new reconciliation keys for the current period. However, time-based revenue calculations and contract liability and asset calculations can still request new reconciliation keys for the current period. This status is intended for scenarios when you are preparing your revenue postings and you are ready to prevent new transactions from being posted to the current period.
Close	New transactions cannot request new reconciliation keys for the current period. All subsequent transactions are ready to be posted to a later period that is open.

Opening and closing revenue accounting periods

You have the following options for managing the statuses of revenue accounting periods:

- **Opening and closing revenue accounting periods in Customizing**
  You can set the status for each revenue accounting period in the following Customizing activity. For a combination of company code and accounting principle, the accountant can specify a starting period (included) from which all the following periods are open for revenue accounting.
  Revenue Accounting > *Revenue Accounting Contracts* > *Open and Close Revenue Accounting Periods*
- **Closing the revenue accounting period after posting**
  When you run the *Revenue Posting Run* program to transfer revenue postings nto the general ledger and CO-PA, you have then option of closing the corresponding revenue accounting period after a successful revenue posting job.

9.9 Shifting Contracts with Failed Postings to the Next Period

When an accountant runs revenue postings at the end of an accounting period, some issues may prevent the postings from being successfully transferred to the corresponding ledgers. If the accountant cannot solve the issues immediately and has a very small time window for period-end closing, they can choose to shift unfinished postings for specific contracts into the next accounting period.

- Shifting contracts multiple times
  After shifting a contract into the next period, the accountant can still choose to shift the contract to the next period afterward if certain impediments still persist.
- Tracking shifting history
  For each shifting operation, the accountant specifies a predefined reason code that indicates the reason for performing this operation. The history of contract shifting is maintained for later review and audit.

9.10 Integration with the Financial Closing Cockpit

Use

The three ABAP programs for revenue posting can be scheduled in the SAP Financial Closing cockpit (FCc).

Prerequisites

If you run background jobs with parallel processing enabled, you must run the corresponding ABAP program in synchronous mode for the statuses to be correctly reported back to FCc.

Features

Revenue Accounting allows you to schedule background jobs for revenue posting in the following ways:

- You can include the three steps for revenue posting in a closing template for them to run at specified times.
- FCc allows you to plan a dependency by specifying the predecessor and successor for a background job. A job starts running only if the specified predecessor job has been completed with a certain status.
- Revenue Accounting reports the statuses of revenue posting jobs back to FCc so that the accountant can monitor the job statuses in FCc.
  Each posting job triggers multiple subordinate tasks to perform different kinds of processing. Revenue Accounting only reports a general status for each posting job, as an aggregate of all subordinate tasks, to FCc. These statuses are displayed as *Finished Without Error*, *Finished with Error*, and *Finished with Warning*. When errors or warnings are issued for a job, the accountant can use transaction **SLG1** to check details in the FARR application log.
- FCc supports running background jobs with selection criteria specified in variants. You can create transaction variants by using transaction **SHD0** and then use the variants in FCc. All custom fields supported by Revenue Accounting can be included in the variants used in FCc.

10 Reconciliation

Revenue Accounting provides the following reports for reconciliation:

- **Revenue Posting and General Ledger**
- **Revenue Accounting Items and Revenue Accounting**

10.1 Reconciliation: Revenue Posting and General Ledger

Technical users, such as a system administrator, can use reports to identify technical issues that cause data inconsistencies between the revenue posting table and the general ledger.

Revenue Postings and General Ledger

Table 80:

Item	Details
Report name	*Revenue Postings and General Ledger*
Intended users	System administrator
Selection criteria	• **Company code (required)**: You can select only one company code. • **Accounting principle (required)**: You can select only one accounting principle. • **Fiscal year and period (required)**: You can perform reconciliation for only one period at a time. • **Run ID (optional)**: You can select one run ID or a range of run IDs. The run ID is unique for each successful posting run.
Technical parameters	• **Result view mode**: You can choose to display the result in the summary view or the detail view. • **Synchronous**: If you set the *Synchronous* indicator, the system processes the batch jobs synchronously in the background.

Item	Details
Comparison for reconciliation	This report compares the posting table and the FI documents posted to the general ledger. The report matches records from both sides, by G/L account and amount. If records have the same G/L account but have different amounts, they are identified as a difference. Similarly, if a record from one side does not have a match from the other side, it is also identified as a difference.
Indication of differences	The report displays a line for each difference. Only differences are displayed in the report. For each difference, items from the two sides are paired together. For the posting table side, performance obligations are listed. For the general ledger side, the corresponding line item in the FI document is displayed. A difference line is displayed that indicates the difference amount.
Reconciliation action	This type of difference may occur because of technical issues. In this case, you can perform a reversal posting job against the previous posting job, correct the account assignment, trigger a reprocessing of the account assignment, and then perform a revenue posting job again. Alternatively, you can make manual postings to fix the differences.

Posting Table

Before posting FI documents to the general ledger for revenue-related transactions, the system tracks these transactions and prepares revenue posting data in a table, known as the posting table. The posting table represents the revenue accounting perspective of the posting data. Each record includes information extracted from revenue accounting data, such as a posting category that indicates why this posting is needed, the G/L account used for the posting, and account assignment data.

> **Note**
>
> - This reconciliation report is typically scheduled for the end of the period, when the operational system stops processing more events for that period. While this report is running, make sure that no more revenue-related events are passed from the operational system.
> - This reconciliation report runs as a background job by default. You can view the job details to see the report results.

10.2 Reconciliation: Revenue Accounting Items and Revenue Accounting

Revenue Accounting receives data from different components, such as Sales and Distribution (SD) or Customer Relationship Management (CRM), and posts documents to General Ledger Accounting (FI-GL) and Profitability

Analysis (CO-PA). The system logs any errors that occur in the communication between the components and processing in the Adapter Reuse Layer (ARL). Consequently, you need to reconcile data until the data processed in ARL and the data finalized in the revenue accounting engine are consistent. You need a summary report to reconcile data between revenue accounting items and the revenue accounting engine, and you need to perform reconciliation regularly. You can reconcile values from sales order items, original prices from sales orders, goods issues, and invoices that have been processed in ARL with the values in corresponding performance obligations and related tables in the Revenue Accounting Engine.

Table 81:

Item	Details
Report name	Revenue Accounting Items and Revenue Accounting
Intended user	System administrator
Selection criteria	• *Company Code*: You can perform reconciliation for specific company codes. • *Accounting Principle*: You can perform reconciliation according to a specific accounting principle. • *Start Date of Reconciliation*: This reconciliation report checks data from the specified date to the present time. By default, the report starts from the point where last reconciliation occurred. You can specify a date earlier than the date when last reconciliation occurred. However, you cannot specify a start date in simulation mode. • *Performance Obligation*: You can specify performance obligations to run the reconciliation only in simulation mode.

Item	Details
Technical parameters	• *Number of Intervals*: The number must not exceed 1000 as there are only 1000 subareas available for parallelization. • *Size of the Selection Blocks*: The block size controls how many selected items are held in the main memory. Too few items cause the database to be accessed more frequently; too many items increases the load on the system caused by the management of the data. Reconcile the block size with the size of the interval. • *Simulation Mode*: When the parallelized report is started in simulation mode, no database updates are performed. • *Dialog Mode*: If the *Dialog Mode* indicator is not set, the framework processes the data in batch mode and intervals are processed in parallel batch jobs. If the *Dialog Mode* indicator is set, the framework processes the data in dialog mode (without creating batch jobs). Intervals are processed sequentially in one dialog process. In dialog mode, the *Synchronous Call* indicator is set automatically by the system and cannot be changed. • *Synchronous Call*: If you do not set the *Synchronous Call* indicator, the system processes the batch jobs asynchronously in the background. Immediately after you have started the program, the system displays the batch job monitor. If you set the *Synchronous Call* indicator, you can display the application log in transaction `SLG1` after processing has finished, regardless of whether you have used dialog or batch mode.

Item	Details
Comparison for reconciliation	The system compares data for reconciliation as follows: • Latest original price and cost from sales order per condition type The system compares the current original price and cost from the sales order per condition type in Revenue Accounting against the latest order item of processed accounting items. The system does not reconcile adjustments of the transaction price and cost from invoices with deviating conditions. • Invoice total amount per performance obligations The system compares invoice total amount per performance obligation. • Invoiced amount per condition type of both price and cost The system compares the invoiced amount of price and cost in processed revenue accounting item and deferral items per condition type. • Fulfilled quantities The system compares actual fulfilled quantities per performance obligation. The system does not compare calculated quantities in revenue accounting. For those performance obligations with a change history of event and fulfillment type, the report puts an indicator flag on header. The system displays difference by total quantity instead of every goods issue. • Recognized cost The system compares recognized cost per performance obligation excluding that of compound performance obligations.

Item	Details
Indication of differences	The report displays compared results by performance obligation. The results are listed in different check item sections. The system highlights quantities of differences in red. • Performance obligations in a bill of materials The system displays the whole structure of performance obligations if any of the performance obligations compared, be they high-level or low-level, are different. • Performance obligations for which the validation results are `Warning` or `OK` The system compares all figures from processed accounting items with those from the revenue accounting engine. • Performance obligations for which the validation results are `Error` The system does not create deferral items for some of these performance obligations. As a result, the system does not compare performance obligations for which the validation results are `Error`. The system compares these performance obligations again in the next run.
Reconciliation action	If this reconciliation detects any inconsistencies, you need to take measures, such as reprocess certain revenue accounting items or edit some performance obligations manually. If a performance obligation has been fulfilled and the system displays the total quantity, you need to check changing history of events and fulfillments type. Then you can make an adjustment, such as manual fulfillment, until there is no difference.

Exception of reconciliation

When performing reconciliation, the system ignores some items listed in the table below.

Table 82:

Ignored Items	Reasons
Linked performance obligations	The data of linked performance obligations is not located in processed revenue accounting items.
Fulfillment quantity of manually fulfilled performance obligations	The data of fulfillment is not located in processed revenue accounting items.

Ignored Items	Reasons
Fulfillment quantity of performance obligations that are fulfilled by invoice	The data of fulfilled quantity is not located in fulfillment table for processed revenue accounting items.

11 Reporting

11.1 Reconciliation for Accountants

An Accountant, such as a Revenue Specialist, can use several reports to understand the details of FI documents created in revenue posting runs and to identify differences between Revenue Accounting and the general ledger.

Report A

Table 83:

Item	Details
Report name	*FI Documents and Revenue Accounting Contracts*
Intended users	Accountants
Selection criteria	• **Company code (required)**: You can only choose one company code. • **Fiscal year and period (required)**: You can only run this report for one period at a time. • **Accounting principle (required)**: You can only choose one company code. • **Revenue reconciliation key**: You can run this report against data that is associated with specific revenue reconciliation keys. Revenue reconciliation keys are part of the technical implementation of the Revenue Accounting system. For more information, see the *Revenue Reconciliation Keys* section. • **G/L document**: You can run this report against data that is associated with specific G/L documents. • **G/L account**: You can run this report against data that is associated with specific G/L accounts. • **Revenue accounting contract**: You can run this report against data that is associated with specific revenue accounting contracts. • **Posting category**: You can use this option to select posted items that relate to a certain category, such as *Revenue Adjustment*.

Item	Details
Comparison for reconciliation	Typically, the accountant uses this report to display posting details instead of identifying differences. This report displays the corresponding line items in the posted FI documents. The accountant can see which contracts are included in this posting and which performance obligations are included in each contract. A total line is displayed which indicates the value of a G/L document line item that has been posted to a certain G/L account.
Indication of differences	Not applicable
Reconciliation action	Not applicable

Report B

Table 84:

Item	Details
Report name	*Accounts Between Revenue Accounting and G/L*
Intended users	Accountants
Selection criteria	• **Company code (required)**: You can only choose one company code. • **Fiscal year and period (required)**: You can only run this report for one period at a time. • **Accounting principle (required)**: You can only choose one company code. • **G/L account**: You can perform reconciliation against data that is associated with specific G/L accounts. • **Has difference**: You can choose this option to only display items that have differences. • **Run in background**: You can choose this option to run the reconciliation in the background.
Comparison for reconciliation	This report compares the posted amounts by period between Revenue Accounting and the general ledger. If the amount posted by Revenue Accounting under the specific account differs from the amount actually posted in the general ledger, it's identified as a difference.

Item	Details
Indication of differences	The report result displays postings made to the revenue-related accounts. Items that have differences are indicated with a red traffic light. Items that do not have differences are indicated with a green traffic light.
Reconciliation action	This type of difference typically occurs because a user has made postings to the general ledger manually. You can check the posting history to identify the issue.

Example

The revenue-related accounts are determined as follows:

Table 85:

Revenue-Related Account	G/L Account
Account for Receivable Adjustment	300001 (Receivable Adjustment Service)
Account for Unbilled Revenue	300002 (Unbilled Revenue Service)
Account for Deferred Revenue	300003 (Deferred Revenue Service)

After the accountant has performed the revenue posting run for the period 2014001, the system transfers the following postings to the general ledger. In this case, the first two accounts have amounts but the third account has a zero amount.

Table 86:

G/L Account	Posted Amount in Revenue Accounting
300001 (Receivable Adjustment)	100
300002 (Unbilled Revenue)	200
300003 (Deferred Revenue)	0

The accountant then runs this reconciliation report and receives a result that resembles the following:

Table 87:

Period	G/L Account	Amount Posted by Revenue Accounting	Posted Amount in G/L	Difference
201401	300001 (Receivable Adjustment)	100	100	0
201401	300002 (Unbilled Revenue)	200	200	0

Period	G/L Account	Amount Posted by Revenue Accounting	Posted Amount in G/L	Difference
201401	300003 (Deferred Revenue)	0	50	-50

The report result indicates that Revenue Accounting does not post any amount to account 300003 (Deferred Revenue) but an amount of 50 is posted to the account. In this case, a difference of 50 occurs. This situation typically occurs because a user has made postings in the general ledger manually.

11.2 Sample Reports

Analytics and reporting of revenue recognition is necessary for users and stakeholders to monitor, review, and forecast their revenues and costs. Some accounting principles require that the company provides certain analytics reports in its disclosure of revenue. Additionally, analytics reports may help you with strategic decisions.

Several reports are available that address the most typical reporting scenarios. Additionally, you can use these reports as samples for developing your own reports.

- **Disaggregation of revenue**:
  Your company may have to disaggregate revenue into different categories, such as the performance obligation type. The sample reports allow you to display revenue data of a specific accounting period, aggregated by the following dimensions:
  - Customer
  - Customer group
  - Performance obligation type
- **Posted amounts**
  Reports are available that display the original prices, allocated prices, posted revenue, invoiced amount, and other important amounts for contracts and performance obligations of each period. The resulting items are aggregated by the following dimensions:
  - Contract
  - Performance obligation type

11.3 DataSources

11.3.1 Revenue Analysis by Posting Item

DataSource Transactional Data `0FARR_RA_10`

Use

This DataSource extracts posted items from the posting table. Each amount is specific to a posting category.

Direct Access: Supported (without preaggregation)

Real-Time Enabled: No

Released for Data Services: No

Technical Data

Table 88:

Application Component	0FARR
Exchange Available as of Release	ERP 605
Shipment	SAP Revenue Accounting and Reporting 1.0
Content Versions	RA100
RemoteCube-Capable	Yes
Delta-Capable	Yes
Extraction from Archives	No
Verifiable	No

Data Modeling

Delta Update

This DataSource supports delta processing. The timestamp field from database table `FARR_D_POSTING` is for delta calculation.

Fields of Origin for the Extraction Structure

Table 89:

Fields in the Extraction Structure	Description of the Field in the Extraction Structure	Table of Origin	Field in the Table of Origin
`GJAHR`	Fiscal Year		
`POPER`	Posting Period		
`FISCVAR`	Fiscal Year Variant		
`COMPANY_CODE`	Company Code	`FARR_D_POSTING`	`COMPANY_CODE`
`ACCT_PRINCIPLE`	Accounting Principle	`FARR_D_POSTING`	`ACCT_PRINCIPLE`
`RECON_KEY`	Reconciliation Key	`FARR_D_POSTING`	`RECON_KEY`

Fields in the Extraction Structure	Description of the Field in the Extraction Structure	Table of Origin	Field in the Table of Origin
CONTRACT_ID	Revenue Recognition Contract ID	FARR_D_POSTING	CONTRACT_ID
POB_ID	Performance Obligation ID	FARR_D_POSTING	POB_ID
CONDITION_TYPE	Condition Type	FARR_D_POSTING	CONDITION_TYPE
POST_CAT	Category for Posting Document	FARR_D_POSTING	POST_CAT
HKONT	G/L Account Number	FARR_D_POSTING	HKONT
GUID	Replacement of FARR_POSTING_GUID with Char16 (Char 32) in BW	FARR_D_POSTING	GUID
SHKZG	Debit/Credit Indicator	FARR_D_POSTING	SHKZG
BETRW	Amount in Transaction Currency	FARR_D_POSTING	BETRW
WAERS	Currency Key	FARR_D_POSTING	WAERS
BETRH	Amount in Local Currency	FARR_D_POSTING	BETRH
HWAER	Local Currency	FARR_D_POSTING	HWAER
BETR2	Amount in Second Parallel Local Currency	FARR_D_POSTING	BETR2
HWAE2	Currency Key of Second Local Currency	FARR_D_POSTING	HWAE2
BETR3	Amount in Third Parallel Local Currency	FARR_D_POSTING	BETR3
HWAE3	Currency Key of Third Local Currency	FARR_D_POSTING	HWAE3
STATISTIC	Condition is used for statistics	FARR_D_POSTING	STATISTIC
POB_TYPE	Performance Obligation Type	FARR_D_POSTING	POB_TYPE
SPEC_INDICATOR	Deferral Item Special Indicator	FARR_D_POSTING	SPEC_INDICATOR
.INCLUDE			
PAOBJNR	Profitability Segment Number (CO-PA)	FARR_D_POSTING	PAOBJNR
FKBER	Functional Area	FARR_D_POSTING	FKBER
GSBER	Business Area	FARR_D_POSTING	GSBER
SEGMENT	Segment for Segmental Reporting	FARR_D_POSTING	SEGMENT
PRCTR	Profit Center	FARR_D_POSTING	PRCTR
KOKRS	Controlling Area		KOKRS
TIMESTAMP	UTC Time Stamp in Short Form (YYYYMMDDhhmmss)	FARR_D_POSTING	TIMESTAMP

Extractor Logic

- The basis of extraction is the `FARR_D_POSTING` table.
- The time (changed/created) of the transaction data record is set in the TIMESTAMP field in the extractor.
- This DataSource provides information about object numbers in Revenue Accounting and this information is used for maintaining time-dependent relationships of contracts and performance obligations.
- Posted values are categorized by posting category.
  CL: Contract Liability
  CA: Contract Asset
  RA: Receivable Adjustment
  RV: Revenue
  CC: Cost Correction
  DR: Deferred Revenue
  UR: Unbilled Receivable
  IC: Invoice Correction
  CO: Cost
  CJ: Cost Adjustment
  ED: Exchange Rate Diff.

11.3.2 Allocated Price Change of POB

DataSource Transactional Data `0FARR_RA_20`

Use

This DataSource extracts items from the deferral items table.

Direct Access: Supported (without preaggregation)

Real-time Enabled: No

Released for Data Services: No

Technical Data

Table 90:

Application Component	0FARR
Exchange Available as of Release	ERP 605
Shipment	SAP Revenue Accounting and Reporting 1.0
Content Versions	RA100
RemoteCube-Capable	Yes

Delta-Capable	Yes
Extraction from Archives	No
Verifiable	No

Data Modeling

Delta Update

The DataSource extracts items from database table FARR_D_DEFITEM. Delta processing is supported by the timestamp field of the table.

Fields of Origin for the Extraction Structure

Table 91:

Fields in the Extraction Structure	Description of the Field in the Extraction Structure	Table of Origin	Field in the Table of Origin
GJAHR	Fiscal Year		
POPER	Posting Period		
FISCVAR	Fiscal Year Variant		
RECON_KEY	Reconciliation Key	FARR_D_DEFITEM	RECON_KEY
POB_ID	Performance Obligation ID	FARR_D_DEFITEM	POB_ID
CONDITION_TYPE	Condition Type	FARR_D_DEFITEM	CONDITION_TYPE
DEFERRAL_CAT	Deferral Category	FARR_D_DEFITEM	DEFERRAL_CAT
EVENT_TYPE	Fulfillment Event Type	FARR_D_DEFITEM	EVENT_TYPE
FULFILL_TYPE	Fulfillment Type	FARR_D_DEFITEM	FULFILL_TYPE
COMPANY_CODE	Company Code	FARR_D_DEFITEM	COMPANY_CODE
STATISTIC	Condition is used for statistics	FARR_D_DEFITEM	STATISTIC
CATEGORY	Condition Is Pricing or Costing	FARR_D_DEFITEM	CATEGORY
SPEC_INDICATOR	Deferral Item Special Indicator	FARR_D_DEFITEM	SPEC_INDICATOR
DOC_AMT_DELTA	Amount of Revenue Accounting Item	FARR_D_DEFITEM	DOC_AMT_DELTA
DOC_QTY_DELTA	Quantity	FARR_D_DEFITEM	DOC_QTY_DELTA
QUANTITY_UNIT	Quantity Unit	FARR_D_DEFITEM	QUANTITY_UNIT
AMOUNT_CURK	Currency Key	FARR_D_DEFITEM	AMOUNT_CURK
RECODE_MODE	BW Delta Process: Record Mode		
TIMESTAMP	UTC Time Stamp in Short Form (YYYYMMDDhhmmss)	FARR_D_DEFITEM	TIMESTAMP

Extractor Logic

- The basis of extraction is the FARR_D_DEFITEM table.
- The time (changed/created) of the transaction data record is set in the TIMESTAMP field in the extractor.
- This extractor supports delete operation in the database table. Table FARR_D_DELDEFITM stores all deletion entries (entries that represent deletions).
- This DataSource provides information about object numbers in Revenue Accounting and this information is used for linking time-dependent relationships of contracts and performance obligations.
- Restrictions apply to certain key figures.
  1. Allocated Price
     STATISTIC =“ ”
     CATEGORY =“P”
  2. Original Price
     STATISTIC = “ ”
     CATEGORY = “P”
     SPEC_INDICATOR <> “D”

11.3.3 Revenue Forecast

DataSource Transactional Data 0FARR_RA_30

Use

This DataSource extracts items from the deferral items table.

Direct Access: Supported (without preaggregation)

Real-time Enabled: No

Released for Data Services: No

Technical Data

Table 92:

Application Component	0FARR
Exchange Available as of Release	ERP 605
Shipment	SAP Revenue Accounting and Reporting 1.0
Content Versions	RA100
RemoteCube-Capable	Yes
Delta-Capable	Yes

Extraction from Archives	No
Verifiable	No

Data Modeling

Delta Update

The DataSource extracts items from database table FARR_D_DEFITEM. Delta processing is supported by the timestamp field of the table.

Fields of Origin for the Extraction Structure

Table 93:

Fields in the Extraction Structure	Description of the Field in the Extraction Structure	Table of Origin	Field in the Table of Origin
GJAHR	Fiscal Year		
POPER	Posting Period		
FISCVAR	Fiscal year variant		
RECON_KEY	Reconciliation Key	FARR_D_DEFITEM	RECON_KEY
CONTRACT_ID	Contract ID	FARR_D_DEFITEM	CONTRACT_ID
POB_ID	Performance Obligation ID	FARR_D_DEFITEM	POB_ID
CONDITION_TYPE	Condition Type	FARR_D_DEFITEM	CONDITION_TYPE
DEFERRAL_CAT	Deferral Category	FARR_D_DEFITEM	DEFERRAL_CAT
EVENT_TYPE	Fulfillment Event Type	FARR_D_DEFITEM	EVENT_TYPE
FULFILL_TYPE	Fulfillment Type	FARR_D_DEFITEM	FULFILL_TYPE
COMPANY_CODE	Company Code	FARR_D_DEFITEM	COMPANY_CODE
STATISTIC	Condition is used for statistics	FARR_D_DEFITEM	STATISTIC
CATEGORY	Condition is Pricing or Costing	FARR_D_DEFITEM	CATEGORY
SPEC_INDICATOR	Deferral Item Special Indicator	FARR_D_DEFITEM	SPEC_INDICATOR
REV_AMT_DELTA	Forecast Revenue Amount	FARR_D_DEFITEM	REV_AMT_DELTA
REV_QTY_DELTA	Forecast Quantity	FARR_D_DEFITEM	REV_QTY_DELTA
QUANTITY_UNIT	Quantity Unit	FARR_D_DEFITEM	QUANTITY_UNIT
AMOUNT_CURK	Currency Key	FARR_D_DEFITEM	AMOUNT_CURK
RECODE_MODE	BW Delta Process: Record Mode		
TIMESTAMP	UTC Time Stamp in Short Form (YYYYMMDDhhmmss)	FARR_D_DEFITEM	TIMESTAMP

Extractor Logic

1. Revenue Accounting prepares data of all time-based revenue. This data is the basis of revenue forecast.
2. Datasources `0FARR_RA30`extract deleted items from the `FARR_D_DELDEFITM` table.
3. This DataSource extracts deferral items for all times so that you can rebuild any future revenue data.
4. This DataSource supports delta extraction by using the timestamp in the deferral items table (`farr_d_def_item`).

11.3.4 Revenue Object Attribute

DataSource Attributes `0FARR_OBJNR_ATTR`

Use

The DataSource is used to build time-dependent relationships of performance obligations and contracts.

Direct Access: Supported (without preaggregation)

Real-Time-Enabled: No

Released for Data Services: No

Technical Data

Table 94:

Application Component	0FARR
Exchange Available as of Release	ERP 605
Shipment	SAP Revenue Accounting and Reporting 1.0
Content Versions	RA100
RemoteCube-Capable	Yes
Delta-Capable	Yes
Extraction from Archives	No
Verifiable	No

Data Modeling

Delta Update

The DataSource extracts items from database table `FARR_D_POB_HIS`. Delta processing is supported by the timestamp field of the table.

This DataSource provides information about object numbers of Revenue Accounting objects, such as contracts and performance obligations. The object number is a technical field for BI modeling. Keyfigures such as revenue and liablity can be posted either on contract or performance obligation level. Therefore, you need information that maintains time-dependent relationships between contracts and performance obligations. Additionally, object number information is also available in transaction-related DataSources, such as `0FARR_RA_10`, `0FARR_RA_20`, and `0FARR_RA_30`.

Fields of Origin for the Extraction Structure

Table 95:

Fields in the Extraction Structure	Description of the Field in the Extraction Structure	Table of Origin	Field in the Table of Origin
OBJNR	Revenue Object Number		
POB_ID	Performance Obligation ID	FARR_D_POB_HIS	POB_ID
DATE_TO	Valid-To Date	FARR_D_POB_HIS	DATE_TO
DATE_FROM	Valid-From Date	FARR_D_POB_HIS	DATE_FROM
CONTRACT_ID	Revenue Recognition Contract ID	FARR_D_POB_HIS	CONTRACT_ID
CREATED_BY	Name of Person Who Created Object	FARR_D_POB_HIS	CREATED_BY
CREATED_ON	Date on Which Record Was Created	FARR_D_POB_HIS	CREATED_ON
TIMESTAMP	UTC Time Stamp in Short Form (YYYYMMDDhhmmss)	FARR_D_POB_HIS	TIMESTAMP

11.3.5 Revenue Contract

DataSource Attributes `0FARR_CONTRACT_ATTR`

Use

The DataSource extracts contract data from the `FARR_D_CONTRACT` table.

Direct Access: Supported (without preaggregation)

Real-time Enabled: No

Released for Data Services: No

Technical Data

Table 96:

Application Component	0FARR
Exchange Available as of Release	ERP 605
Shipment	SAP Revenue Accounting and Reporting 1.0
Content Versions	RA100
RemoteCube-Capable	Yes
Delta-Capable	No
Extraction from Archives	No
Verifiable	No

Data Modeling

Fields of Origin for the Extraction Structure

Table 97:

Fields in the Extraction Structure	Description of the Field in the Extraction Structure	Table of Origin	Field in the Table of Origin
CONTRACT_ID	Revenue Recognition Contract ID	FARR_D_CONTRACT	CONTRACT_ID
CONTRACT_CAT	Contract Category	FARR_D_CONTRACT	CONTRACT_CAT
CUSTOMER_ID	Customer Number	FARR_D_CONTRACT	CUSTOMER_ID
CUSTOMER_GRP	Group key	FARR_D_CONTRACT	CUSTOMER_GRP
ACCT_PRINCIPLE	Accounting Principle	FARR_D_CONTRACT	ACCT_PRINCIPLE
DESCRIPTION	Description of Revenue Accounting Items	FARR_D_CONTRACT	DESCRIPTION
ADAPTER_ID	Logistics Adapter ID	FARR_D_CONTRACT	ADAPTER_ID
PARTNER	Business Partner Number	FARR_D_CONTRACT	PARTNER
CONTR_CREATED_ON	UTC Time Stamp in Short Form (YYYYMMDDhhmmss)	FARR_D_CONTRACT	CONTR_CREATED_ON
NUM_OF_POB	Number of Performance Obligations	FARR_D_CONTRACT	NUM_OF_POB
TRX_PRICE	Transaction Price	FARR_D_CONTRACT	TRX_PRICE
TRX_PRICE_CURK	Currency Key	FARR_D_CONTRACT	TRX_PRICE_CURK
STATUS	Contract Status	FARR_D_CONTRACT	STATUS
VALIDATE_RESULT	Validate result	FARR_D_CONTRACT	VALIDATE_RESULT
MANUAL_CREATED	Manually Created	FARR_D_CONTRACT	MANUAL_CREATED

Fields in the Extraction Structure	Description of the Field in the Extraction Structure	Table of Origin	Field in the Table of Origin
MANUAL_CHANGED	Manually Changed	FARR_D_CONTRACT	MANUAL_CHANGED
MANUAL_DELETED	Manually Deleted	FARR_D_CONTRACT	MANUAL_DELETED
PRICE_ADJUSTED	Price Adjustment Occurred on the Contract	FARR_D_CONTRACT	PRICE_ADJUSTED
COMPANY_CODE	Company Code	FARR_D_CONTRACT	COMPANY_CODE
ALLOC_DIFFER	Adjustment Amplitude	FARR_D_CONTRACT	ALLOC_DIFFER
CREATED_BY	Name of Person who Created the Object	FARR_D_CONTRACT	CREATED_BY
CREATED_ON	Date on Which Record Was Created	FARR_D_CONTRACT	CREATED_ON
LAST_CHANGED_BY	Name of Person Who Changed Object	FARR_D_CONTRACT	LAST_CHANGED_BY
LAST_CHANGED_ON	Date on Which Record Was Changed	FARR_D_CONTRACT	LAST_CHANGED_ON
LAST_CHANGED_BY	Name of Person Who Changed Object	FARR_D_CONTRACT	LAST_CHANGED_BY

11.3.6 Performance Obligation

DataSource Attributes 0FARR_POB_ATTR

Use

The DataSource extracts attributes of performance obligation from the FARR_D_POB table.

Direct Access: Supported (without preaggregation)

Real-time Enabled: No

Released for Data Services: No

Technical Data

Table 98:

Application Component	0FARR
Exchange Available as of Release	ERP 605

Shipment	SAP Revenue Accounting and Reporting 1.0
Content Versions	RA100
RemoteCube-Capable	Yes
Delta-Capable	No
Extraction from Archives	No
Verifiable	No

Data Modeling

Fields of Origin for the Extraction Structure

Table 99:

Fields in the Extraction Structure	Description of the Field in the Extraction Structure	Table of Origin	Field in the Table of Origin
POB_ID	Performance Obligation ID	FARR_D_POB	POB_ID
POB_NAME	Performance Obligation Name	FARR_D_POB	POB_NAME
POB_ROLE	Leading/Linked	FARR_D_POB	POB_ROLE
POB_TYPE	Performance Obligation Type	FARR_D_POB	POB_TYPE
ACCT_PRINCIPLE	Accounting Principle	FARR_D_POB	ACCT_PRINCIPLE
COMPANY_CODE	Company Code	FARR_D_POB	COMPANY_CODE
SSP	Standalone Selling Price	FARR_D_POB	SSP
SSP_CURK	Currency Key	FARR_D_POB	SSP_CURK
QUANTITY	Quantity	FARR_D_POB	QUANTITY
QUANTITY_UNIT	Quantity Unit	FARR_D_POB	QUANTITY_UNIT
DURATION	Duration	FARR_D_POB	DURATION
DURATION_UNIT	Duration Unit	FARR_D_POB	DURATION_UNIT
EVENT_TYPE	Fulfillment Event Type	FARR_D_POB	EVENT_TYPE
FULFILL_TYPE	Fulfillment Type	FARR_D_POB	FULFILL_TYPE
DEFERRAL_METHOD	Deferral Method	FARR_D_POB	DEFERRAL_METHOD
START_DATE	Start Date	FARR_D_POB	START_DATE
END_DATE	End Date	FARR_D_POB	END_DATE
START_DATE_TYPE	Indicator denoting whether start date can be provided later	FARR_D_POB	START_DATE_TYPE
NO_START_DATE	Indicator denoting whether start date can be provided later	FARR_D_POB	NO_START_DATE

Fields in the Extraction Structure	Description of the Field in the Extraction Structure	Table of Origin	Field in the Table of Origin
DISTINCT_TYPE	Performance Obligation Composition	FARR_D_POB	DISTINCT_TYPE
DISTINCT_FULFILL	Indicator denoting whether POB can be fulfilled distinctly	FARR_D_POB	DISTINCT_FULFILL
VALUE_RELEVANT	Indicator identifying whether milestone billing plan POB	FARR_D_POB	VALUE_RELEVANT
STATUS	Performance Obligation Status	FARR_D_POB	STATUS
REVIEW_REASON	Review Reason	FARR_D_POB	REVIEW_REASON
REVIEW_DATE	Review Date	FARR_D_POB	REVIEW_DATE
PAOBJNR	Profitability Segment Number (CO-PA)	FARR_D_POB	PAOBJNR
FKBER	Functional Area	FARR_D_POB	FKBER
GSBER	Business Area	FARR_D_POB	GSBER
SEGMENT	Segment for Segmental Reporting	FARR_D_POB	SEGMENT
PRCTR	Profit Center	FARR_D_POB	PRCTR
HI_LEVEL_POB_ID	Higher-Level Performance Obligation ID	FARR_D_POB	HI_LEVEL_POB_ID
LEADING_POB_ID	Leading Performance Obligation ID	FARR_D_POB	LEADING_POB_ID
BOM_POB_ID	POB ID of the Root POB in the BOM Structure	FARR_D_POB	BOM_POB_ID
CONTRACT_ID	Revenue Recognition Contract ID	FARR_D_POB	CONTRACT_ID
CUSTOMER_ID	Customer Number	FARR_D_POB	CUSTOMER_ID
PARTNER	Business Partner Number	FARR_D_POB	PARTNER
ADAPTER_ID	Logistics Adapter ID	FARR_D_POB	ADAPTER_ID
VALIDATE_RESULT	Validate Result	FARR_D_POB	VALIDATE_RESULT
SOFT_DELETED	Soft-Deleted	FARR_D_POB	SOFT_DELETED
TRX_PRICE	Transaction Price	FARR_D_POB	TRX_PRICE
FINAL_INVOICE	Indicator for Final Invoice	FARR_D_POB	FINAL_INVOICE
FULLY_FULFILLED	Fully Fulfilled	FARR_D_POB	FULLY_FULFILLED
CREATED_BY	Name of Person Who Created the Object	FARR_D_POB	CREATED_BY
CREATED_ON	Date on Which Record Was Created	FARR_D_POB	CREATED_ON
LAST_CHANGED_BY	Name of Person Who Changed Object	FARR_D_POB	LAST_CHANGED_BY

Fields in the Extraction Structure	Description of the Field in the Extraction Structure	Table of Origin	Field in the Table of Origin
LAST_CHANGED_ON	Changed On	FARR_D_POB	LAST_CHANGED_ON

11.3.7 Reconciliation Key

DataSource Attributes 0FARR_RECKEY_ATTR

Use

This DataSource extracts reconciliation key attributes.

Direct Access: Supported (without preaggregation)

Real-time Enabled: No

Released for Data Services: No

Technical Data

Table 100:

Application Component	0FARR
Exchange Available as of Release	ERP 605
Shipment	SAP Revenue Accounting and Reporting 1.1
Content Versions	RA110
RemoteCube-Capable	Yes
Delta-Capable	Yes
Extraction from Archives	No
Verifiable	No

Data Modeling

Fields of Origin for the Extraction Structure

Table 101:

Fields in the Extraction Structure	Description of the Field in the Extraction Structure	Table of Origin	Field in the Table of Origin
COMPANY_CODE	Company Code	FARR_D_RECON_KEY	COMPANY_CODE
RECON_KEY	Reconciliation Key	FARR_D_RECON_KEY	RECON_KEY
Contract_ID	Contract ID	FARR_D_RECON_KEY_ID	Contract ID
ACCT_PRINCIPLE	Accounting Principle	FARR_D_RECON_KEY	ACCT_PRINCIPLE
STATUS	Status of Revenue Reconciliation Key	FARR_D_RECON_KEY	STATUS
GJAHR	Fiscal Year	FARR_D_RECON_KEY	GJAHR
POPER	Posting Period	FARR_D_RECON_KEY	POPER
CREATED_BY	Name of Person Who Created the Object	FARR_D_RECON_KEY	CREATED_BY
CREATED_ON	UTC Time Stamp in Short Form (YYYYMMDDhhmmss)	FARR_D_RECON_KEY	CREATED_ON

11.3.8 Contract Status Text

DataSource Texts 0FARR_CONTR_STATUS_TEXT

Use

This DataSource extracts the texts for contract statuses.

Direct Access: Supported (without preaggregation)

Real-time Enabled: No

Released for Data Services: No

Technical Data

Table 102:

Application Component	0FARR-IO
Exchange Available as of Release	SAP APPL 605

Shipment	SAP Revenue Accounting and Reporting 1.1
Content Versions	RA110
RemoteCube-Capable	Yes
Delta-Capable	No
Extraction from Archives	No
Verifiable	No

Data Modeling

Delta Update

Fields of Origin for the Extraction Structure

Table 103:

Fields in the Extraction Structure	Description of the Field in the Extraction Structure	Table of Origin	Field in the Table of Origin
LANGU	LANGU		
KEY1	ROTEXTKEY1		
TXTMD	Medium description		

11.3.9 Reconciliation Key Status Text

DataSource Texts 0FARR_RECKEY_STAT_TEXT

Use

This DataSource extracts the texts for reconciliation key statuses.

Direct Access: Supported (without preaggregation)

Real-time Enabled: No

Released for Data Services: No

Technical Data

Table 104:

Application Component	0FARR

Exchange Available as of Release	ERP 605
Shipment	SAP Revenue Accounting and Reporting 1.0
Content Versions	RA100
RemoteCube-Capable	Yes
Delta-Capable	No
Extraction from Archives	No
Verifiable	No

Data Modeling

Fields of Origin for the Extraction Structure

Table 105:

Fields in the Extraction Structure	Description of the Field in the Extraction Structure	Table of Origin	Field in the Table of Origin
LANGUAGE	Language		
KEY1	Key		
TXTMD	RSTXTMD		

11.3.10 Contract Category Text

DataSource Texts 0FARR_CONTR_CAT_TEXT

Use

This DataSource extracts the texts for contract categories.

Direct Access: Supported (without preaggregation)

Real-time Enabled: No

Released for Data Services: No

Technical Data

Table 106:

Application Component	0FARR

Exchange Available as of Release	ERP 605
Shipment	SAP Revenue Accounting and Reporting 1.0
Content Versions	RA100
RemoteCube-Capable	Yes
Delta-Capable	No
Extraction from Archives	No
Verifiable	No

Data Modeling

Fields of Origin for the Extraction Structure

Table 107:

Fields in the Extraction Structure	Description of the Field in the Extraction Structure	Table of Origin	Field in the Table of Origin
LANGUAGE	Language		
CONTRACT_CAT	Contract Category		
DESCRIPTION	Description		

11.3.11 Event Type Text

DataSource Texts 0FARR_EVT_TYPE_TEXT

Use

This DataSource extracts the texts for event types.

Direct Access: Supported (without preaggregation)

Real-time Enabled: No

Released for Data Services: No

Technical Data

Table 108:

Application Component	0FARR

Exchange Available as of Release	ERP 605
Shipment	SAP Revenue Accounting and Reporting 1.0
Content Versions	RA100
RemoteCube-Capable	Yes
Delta-Capable	No
Extraction from Archives	No
Verifiable	No

Data Modeling

Fields of Origin for the Extraction Structure

Table 109:

Fields in the Extraction Structure	Description of the Field in the Extraction Structure	Table of Origin	Field in the Table of Origin
LANGUAGE	Language	FARR_C_EVNT_TY_T	LANGUAGE
EVENT_TYPE	Event type code	FARR_C_EVNT_TY_T	EVENT_TYPE
DESCRIPTION	Description	FARR_C_EVNT_TY_T	DESCRIPTION

11.3.12 POB Type text

DataSource Texts 0FARR_POB_TYPE_TEXT

Use

This DataSource extracts the texts for performance obligation types.

Direct Access: Supported (without preaggregation)

Real-time Enabled: No

Released for Data Services: No

Technical Data

Table 110:

Application Component	0FARR

Exchange Available as of Release	ERP 605
Shipment	SAP Revenue Accounting and Reporting 1.0
Content Versions	RA100
RemoteCube-Capable	Yes
Delta-Capable	No
Extraction from Archives	No
Verifiable	No

Data Modeling

Fields of Origin for the Extraction Structure

Table 111:

Fields in the Extraction Structure	Description of the Field in the Extraction Structure	Table of Origin	Field in the Table of Origin
LANGUAGE	Language	FARR_C_POB_TYP_T	LANGUAGE
POB_TYPE	POB type code	FARR_C_POB_TYP_T	POB_TYPE
DESCRIPTION	Description	FARR_C_POB_TYP_T	DESCRIPTION

11.3.13 Fulfill Type Text

DataSource Texts 0FARR_FULFILL_TYPE_TEXT

Use

This DataSource extracts the texts for fulfillment types.

Direct Access: Supported (without preaggregation)

Real-time Enabled: No

Released for Data Services: No

Technical Data

Table 112:

Application Component	0FARR

Exchange Available as of Release	ERP 605
Shipment	SAP Revenue Accounting and Reporting 1.0
Content Versions	RA100
RemoteCube-Capable	Yes
Delta-Capable	No
Extraction from Archives	No
Verifiable	No

Data Modeling

Fields of Origin for the Extraction Structure

Table 113:

Fields in the Extraction Structure	Description of the Field in the Extraction Structure	Table of Origin	Field in the Table of Origin
LANGUAGE	Language		
KEY1	Key		
TXTMD	RSTXTMD		

11.3.14 POB Role Text

DataSource Texts 0FARR_POB_ROLE_TEXT

Use

This DataSource extracts the texts for the *Leading/Linked* attribute.

Direct Access: Supported (without preaggregation)

Real-time Enabled: No

Released for Data Services: No

Technical Data

Table 114:

Application Component	0FARR

Exchange Available as of Release	ERP 605
Shipment	SAP Revenue Accounting and Reporting 1.0
Content Versions	RA100
RemoteCube-Capable	Yes
Delta-Capable	No
Extraction from Archives	No
Verifiable	No

Data Modeling

Fields of Origin for the Extraction Structure

Table 115:

Fields in the Extraction Structure	Description of the Field in the Extraction Structure	Table of Origin	Field in the Table of Origin
LANGUAGE	Language		
KEY1	Key		
TXTMD	RSTXTMD		

11.3.15 POB Status Text

DataSource Texts 0FARR_POB_STAT_TEXT

Use

This DataSource extracts the texts for performance obligation statuses.

Direct Access: Supported (without preaggregation)

Real-time Enabled: No

Released for Data Services: No

Technical Data

Table 116:

Application Component	0FARR

Exchange Available as of Release	ERP 605
Shipment	SAP Revenue Accounting and Reporting 1.0
Content Versions	RA100
RemoteCube-Capable	Yes
Delta-Capable	No
Extraction from Archives	No
Verifiable	No

Data Modeling

Fields of Origin for the Extraction Structure

Table 117:

Fields in the Extraction Structure	Description of the Field in the Extraction Structure	Table of Origin	Field in the Table of Origin
LANGUAGE	Language		
KEY1	Key		
TXTMD	RSTXTMD		

11.3.16 Post Category Text

DataSource Texts 0FARR_POST_CAT_TEXT

Use

This DataSource extracts the texts for posting categories.

Direct Access: Supported (without preaggregation)

Real-time Enabled: No

Released for Data Services: No

Technical Data

Table 118:

Application Component	0FARR

Exchange Available as of Release	ERP 605
Shipment	SAP Revenue Accounting and Reporting 1.0
Content Versions	RA100
RemoteCube-Capable	Yes
Delta-Capable	No
Extraction from Archives	No
Verifiable	No

Data Modeling

Fields of Origin for the Extraction Structure

Table 119:

Fields in the Extraction Structure	Description of the Field in the Extraction Structure	Table of Origin	Field in the Table of Origin
LANGUAGE	Language		
KEY1	Key		
TXTMD	RSTXTMD		

11.3.17 Start Date Type Text

DataSource Texts 0FARR_ST_DAT_TYP_TEXT

Use

This DataSource extracts the texts for start date types.

Direct Access: Supported (without preaggregation)

Real-time Enabled: No

Released for Data Services: No

Technical Data

Table 120:

Application Component	0FARR

Exchange Available as of Release	ERP 605
Shipment	SAP Revenue Accounting and Reporting 1.0
Content Versions	RA100
RemoteCube-Capable	Yes
Delta-Capable	No
Extraction from Archives	No
Verifiable	No

Data Modeling

Fields of Origin for the Extraction Structure

Table 121:

Fields in the Extraction Structure	Description of the Field in the Extraction Structure	Table of Origin	Field in the Table of Origin
LANGUAGE	Language		
KEY1	Key		
TXTMD	RSTXTMD		

11.3.18 Distinct Type Text

DataSource Texts 0FARR_DIST_TYP_TEXT

Use

This DataSource extracts the texts for composition types (the Composition attribute).

Direct Access: Supported (without preaggregation)

Real-time Enabled: No

Released for Data Services: No

Technical Data

Table 122:

Application Component	0FARR

Exchange Available as of Release	ERP 605
Shipment	SAP Revenue Accounting and Reporting 1.0
Content Versions	RA100
RemoteCube-Capable	Yes
Delta-Capable	No
Extraction from Archives	No
Verifiable	No

Data Modeling

Fields of Origin for the Extraction Structure

Table 123:

Fields in the Extraction Structure	Description of the Field in the Extraction Structure	Table of Origin	Field in the Table of Origin
LANGUAGE	Language		
KEY1	Key		
TXTMD	RSTXTMD		

11.3.19 POB Special Indicator Text

DataSource Texts 0FARR_DEF_S_IND_TEXT

Use

This DataSource extracts the texts for special indicator values (main price, main cost, or allocation difference).

Direct Access: Supported (without preaggregation)

Real-time Enabled: No

Released for Data Services: No

Technical Data

Table 124:

Application Component	0FARR

Exchange Available as of Release	ERP 605
Shipment	SAP Revenue Accounting and Reporting 1.0
Content Versions	RA100
RemoteCube-Capable	Yes
Delta-Capable	No
Extraction from Archives	No
Verifiable	No

Data Modeling

Fields of Origin for the Extraction Structure

Table 125:

Fields in the Extraction Structure	Description of the Field in the Extraction Structure	Table of Origin	Field in the Table of Origin
LANGUAGE	Language		
KEY1	Key		
TXTMD	RSTXTMD		

11.3.20 Review Reason Text

DataSource Texts 0FARR_REV_RSN_TEXT

Use

This DataSource extracts the texts for review reasons.

Direct Access: Supported (without preaggregation)

Real-time Enabled: No

Released for Data Services: No

Technical Data

Table 126:

Application Component	0FARR

Exchange Available as of Release	ERP 605
Shipment	SAP Revenue Accounting and Reporting 1.0
Content Versions	RA100
RemoteCube-Capable	Yes
Delta-Capable	No
Extraction from Archives	No
Verifiable	No

Data Modeling

Fields of Origin for the Extraction Structure

Table 127:

Fields in the Extraction Structure	Description of the Field in the Extraction Structure	Table of Origin	Field in the Table of Origin
LANGUAGE	Language		
KEY1	Key		
TXTMD	RSTXTMD		

11.3.21 Validation Result Text

DataSource Texts 0FARR_VAL_RES_TEXT

Use

This DataSource extracts the texts for validation results.

Direct Access: Supported (without preaggregation)

Real-Time-Enabled: No

Released for Data Services: No

Technical Data

Table 128:

Application Component	0FARR

Exchange Available as of Release	ERP 605
Shipment	SAP Revenue Accounting and Reporting 1.0
Content Versions	RA100
RemoteCube-Capable	Yes
Delta-Capable	No
Extraction from Archives	No
Verifiable	No

Data Modeling

Fields of Origin for the Extraction Structure

Table 129:

Fields in the Extraction Structure	Description of the Field in the Extraction Structure	Table of Origin	Field in the Table of Origin
LANGUAGE	Language		
KEY1	Key		
TXTMD	RSTXTMD		

12 Administration and Maintenance

12.1 Roles

12.1.1 Revenue Accountant

`SAP_SR_FARR_REV_ACCOUNTANT_A`

Use

This role can perform the following tasks:

- Display all details of revenue accounting contracts and performance obligations
- Allocate transaction prices
- Change the start date and end date of revenue accounting contracts
- Combine revenue accounting contracts
- Change account determination
- Review revenue accounting contracts in worklists
- Add manual performance obligations
- Enter manual fulfillments
- Simulate and post revenue in posting runs
- Run reconciliation and analytics reports

> **Note**
>
> Relevant role `SAP_SR_FARR_REV_ACCOUNTANT` does not include any authorization data. Instead, it only provides the role menu for the Revenue Accountant role.

12.1.2 Revenue Accounting Administrator

`SAP_SR_FARR_REV_ADMIN_A`

Use

This role can perform the following tasks:

- Configure, monitor, change, and process revenue accounting items that are sent from various sender systems and applications
- Check and change relevant Customizing settings and business rules to make sure that all configurations are correct.
- Schedule posting runs and check logs

This role is typically intended for IT administrators and power users.

> **Note**
>
> Relevant role `SAP_SR_FARR_REV_ADMIN` does not include any authorization data. Instead, it only provides the role menu for the Revenue Accounting Administrator role.

12.1.3 Revenue Accounting Auditor

`SAP_SR_FARR_REV_AUDITOR_A`

Use

This role can view revenue accounting items, revenue accounting contracts, and disclosure data for specific company codes.

A time-based restriction may apply whereby the role can only view the data of a specific fiscal year. Therefore, it is possible that this role can only see a fragment of a contract instead of the entire lifecycle of the contract.

> **Note**
>
> Relevant role `SAP_SR_FARR_REV_AUDITOR` does not include any authorization data. Instead, it only provides the role menu for the Revenue Accounting Auditor role.

12.1.4 Revenue Accounting RFC User

`SAP_SR_FARR_REV_RFCUSER_A`

Use

This authorization role for revenue accounting RFC users allows users to send Revenue Accounting Items (RAIs) from non-SAP source systems. The role must be adjusted to cover the allowed authorization objects and assigned to an RFC user only.

12.2 Migration from a Legacy System

Use

You may be using a legacy application for revenue recognition and want to migrate to SAP Revenue Accounting and Reporting.

General Process

Revenue recognition data that resides in the legacy system must be transferred to the new Revenue Accounting system. This data migration also involves a shift in the accounting method for revenue recognition. Therefore, it is necessary that historical accounting data can be explained by the old accounting method and that accounting data occurring after the migration can be explained by the new accounting method. Transactions that occur after the migration are based on historical data before the migration. Therefore, you must make sure that no more revenue postings are made to accounting periods before the migration. One way of ensuring this is to close all periods pre-dating the migration.

Timing of the Migration

The new revenue accounting method is effective on a specific date, known as the takeover date. As of the takeover date, your company uses the new revenue accounting method for revenue recognition. The revenue accounting data after the migration is based on the revenue accounting data before the migration. Therefore, the actual migration can start sometime after the takeover date, when no more revenue postings are made to the old accounting periods.

As the migration cannot occur until after the takeover date, it must treat documents that are posted before and after the takeover date differently. Documents that are posted before the takeover date are posted by the legacy system. Even though these documents are transferred to Revenue Accounting, they must not trigger further postings. However, the data in these documents forms the basis for further (delta) revenue calculation. Documents that are posted after the takeover date but prior to the actual migration must be handled by the new Revenue Accounting system as if the new accounting system had been active when this document was posted.

More Information

For more information about migration from a legacy system, see the SAP Revenue Accounting and Reporting Administrator's Guide.

13 Migration

After you have installed all of the required components of the SAP Revenue Accounting and Reporting solution, you have to transfer data from your existing open contracts to the new system. This process is referred to as migration.

This chapter describes how to transfer data in existing contracts from operational applications and legacy revenue accounting systems to Revenue Accounting.

13.1 Overall Approach

After you have installed all of the required components of the Revenue Accounting and Reporting solution, you have to transfer data from your existing open contracts to the new system. This process is referred to as migration.

This chapter describes how to transfer data in existing contracts from operational applications and legacy revenue accounting systems to Revenue Accounting. A typical setup of your system landscape may have one or more operational applications that manage the operational processes for delivery and billing of goods or services to customers.

You may have one or more legacy systems where you manage valuation for revenue recognition.

Data from both operational applications and the legacy revenue accounting system must be migrated to Revenue Accounting.

13.1.1 Data Migration Overview

Revenue Accounting manages data for contracts with customers and their performance obligations (POBs). Data from operational contracts and operational contract items in operational applications are transferred to Revenue Accounting in order to create revenue accounting contracts and performance obligations within Revenue Accounting.

You can start using Revenue Accounting at the start of a defined financial period. Then you have to transfer data from all relevant contracts that are still open at the end of the previous period or for which further business is expected. The last date of the previous period is the transfer date. You can transfer independent contract packages on a step-by-step basis and on different transfer dates.

See information about packaged migration in the chapter Migration by Package [page 175].

The migration to Revenue Accounting is divided into two steps:

1. Operational Load
   The operational load transfers information about operational documents and posted revenue from a sender system to Revenue Accounting.

It selects all operational contracts and their related documents which still have an impact on revenue recognition and passes them to Revenue Accounting by creating revenue accounting items (RAIs).
The operational load also evaluates which revenue has already been posted in the general ledger up to the transfer date. The result of this evaluation is transferred by using a separate interface. This interface is a legacy data interface.
Revenue accounting items and legacy data are input for step 2, the initial load.
If Revenue Accounting is used with a different or third party operational system, you need to implement a dedicated operational load to create revenue accounting items.

2. Initial Load
   A special transaction `FARR_RAI_PROC_LOAD` in Revenue Accounting processes revenue accounting items and legacy data and creates corresponding contracts and performance obligations, in the same way as during normal document processing with `FARR_RAI_PROC`.

The data that you have to transfer from the operational applications to Revenue Accounting includes the following:

- Order items. The same attributes are also transferred for new and updated order items.
- Invoice items related to these order items. All invoice items up to the transfer date may also be cumulated into one single invoice item per order item.
- Fulfillment items related to these order items. All fulfillment items up to the transfer date may also be cumulated into one single fulfillment item per order item.

If attributes have already been maintained for revenue recognition in your legacy revenue accounting system, such as standalone selling prices (SSPs) and allocated prices, and if recognized revenue has been calculated, then this data also has to be transferred to Revenue Accounting.

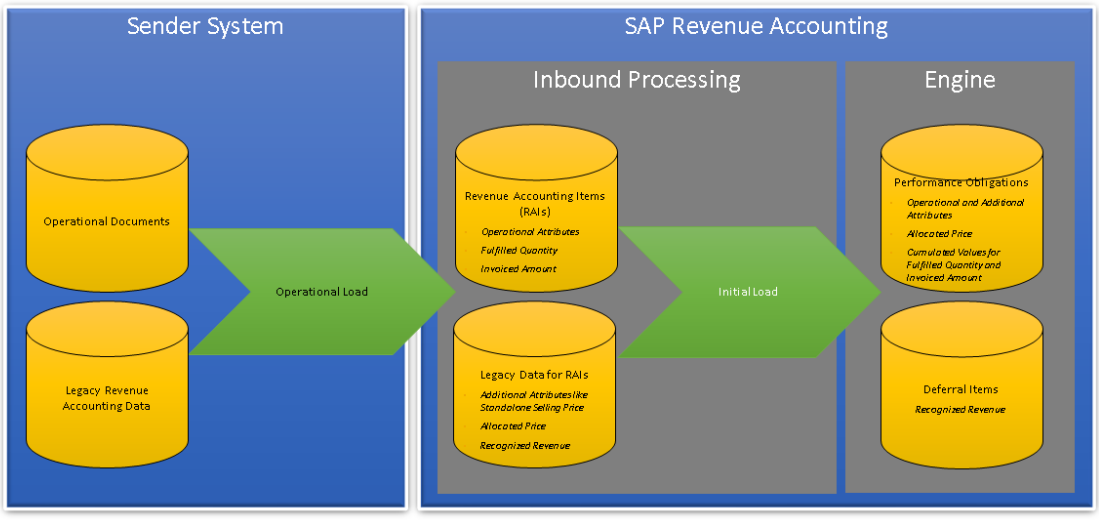

The initial load determines which period that the information belongs to by using the customized transfer date and the posting dates of the documents transferred to Revenue Accounting. All figures that belong to periods up to the transfer date, known as the migration period, are aggregated and this period represents the starting point of future revenue recognition. Each time that Revenue Accounting calculates the amount to be posted in the

current period, it considers the figures from the migration period, such as revenue, that has already been posted through a legacy revenue recognition system. These values can therefore never be changed in Revenue Accounting. For this reason, the migration period has to be closed in the operational application before the operational load starts. The period in Revenue Accounting must also be closed before revenue accounting items from operational load are processed.

> **Note**
>
> Please make sure that you have closed the migration period in General Ledger before the operational load starts. Also you need to make sure that you have set the migration period in Revenue Accounting to status *Closed* or *In-Closing* before revenue accounting items (RAIs) from operational load are processed. However, in the case of Result Analysis migration, the migration period in Revenue Accounting should only be set to status *In-Closing*.

Closing a period usually takes some time in order to allow data for new contracts, contract changes, fulfillment events and invoices to be created in the operational applications between the transfer date and execution date of the operational load. Any changes to operational items between the transfer date and execution of the operational load will be taken into account as if they had already occurred before the transfer date.

Revenue Accounting assigns fulfillments and invoices with an event or posting date to the respective period defined for this event or posting date after the transfer date. So they will be handled as if Revenue Accounting were active when they were posted.

The complete migration, consisting of operational load and initial load, usually takes some time. Revenue Accounting integration has to be activated as soon as the operational load starts. Revenue Accounting does not require a downtime.

Information created by the operational load, such as orders, fulfillments, and invoices, that does not belong to the migration period, such as a date after the transfer date, will first be suspended and processed later on when the company code or migration package is set to *Production*.

As long as the company code or migration package is not yet set to *Production*, all new documents and any changes made to existing documents belonging to this company code or migration package will also not be processed. This means that they will remain, but are suspended, in Revenue Accounting.

You therefore have to reconcile the cumulated values that have been transferred during the migration period with the balances in the general ledger from postings that have been created from the operational application and the legacy revenue accounting system up until the transfer date.

The transfer date is usually defined according to the level of company code so that all documents belonging to the same company code can be loaded in one single step. This means that the complete company code starts its revenue accounting with Revenue Accounting for the period that follows the transfer date.

This approach is not always feasible. If, for example, a company code has a large data volume or different complex sales scenarios, it will be too time-consuming to execute and reconcile the complete migration in between two closings. So the concept of a packaged migration has been introduced. This enables you to perform migration for one (or several) company codes in several steps. You can do this if operational data, such as contracts, can be split into several disjoint classes, for example, different businesses, which can then be migrated separately.

13.1.1.1 Migration by Package

You can either perform migration for a complete company code, or you can load revenue accounting items (RAIs) to Revenue Accounting with finer granularity than an entire company code. This means that you can already start

to use the company code. To load data to company codes that are already productive, you have to define migration packages in Customizing: *Revenue Accounting* > *Revenue Accounting Contracts* > *Define Migration Packages*

Example

You want to migrate a very large company code to Revenue Accounting.

First, you transfer the data of a particular customer group to Revenue Accounting and set the company code to *Productive*. You can then gradually transfer additional customer groups of the company code and set the company code to *Productive* over time. A migration package contains all data for a certain customer group in a company code.

You set the status of individual migration packages in a company code to *Migration* or *Productive* in Customizing: *Revenue Accounting* > *Revenue Accounting Contracts* > *Assign Company Codes to Accounting Principles*. As a prerequisite, the combination of the company code and accounting principle, without a migration package, must be productive, and the transfer date of the new migration package must be the same or later than the transfer date of the migration packages that are already productive.

The transfer date of a migration package has to be the same for all accounting principles of the company code. Also, only one package in each company code can be set to *Migration*.

The sender component transfers the migration package from the `MIG_PACKAGE` field of the main items of the order items to Revenue Accounting.

Inbound processing of Revenue Accounting determines the migration package for the invoice items and fulfillment items internally from the order items to which they belong.

Note

In the initial load `TA FARR_RAI_PROC_LOAD`, you cannot combine performance obligations (POBs) resulting from revenue accounting items from different migration packages in one revenue accounting contract. You can manually combine performance obligations in the Revenue Accounting as soon as both migration packages are set to *Productive*.

To reconcile between migrated data and general ledger accounts, SAP recommends that you define the migration packages so that revenue from different packages can be posted to different general ledger accounts.

Note

There are scenarios that only allow the migration by package, for example, scenarios that include SAP Hybris Billing.

There are other scenarios that allow the migration for a complete company code, in addition to the migration by package, for example, SAP Sales and Distribution (SD).

Further details are available in the *Supported Scenarios* chapter.

13.1.2 Details Regarding the Migration Steps

13.1.2.1 Prerequisites for Migration

Some prerequisites must be completed before you run the initial load to transfer existing contracts to Revenue Accounting.

13.1.2.1.1 Migration to New Operational System

If you want to migrate a legacy operational system to a new operational system, and migrate revenue accounting data to this new operational system, you must first migrate the operational data. Then you can start the migration to Revenue Accounting.

For example, you have a single legacy system that handles both operational processes and revenue accounting, and you want to switch operations to SAP ERP Sales and Distribution (SAP SD). In this scenario, you must first load data that is relevant to operations from the legacy system to SAP SD. You can then load operational data from SAP SD and revenue recognition data from the legacy system to Revenue Accounting.

When it comes to the scope of migration, you have to take into account that the contracts for which events are still expected to occur after the migration are also migrated, including reversal of complete fulfillment.

13.1.2.1.2 Consistency before Initial Load

You must ensure that the following data is consistent before the migration:

- Fulfilled quantity in operational application and legacy system, and recognized revenue in the legacy system
- For time-based fulfillment, the recognized revenue must match the elapsed duration up to the transfer date. Revenue Accounting calculates revenue for time-based fulfillment for every period based on the following formula:
  `Revenue for Time-based Fulfillment for Current Period = (Elapsed Duration / Total Duration) * Allocated Price – Historic Recognized Revenue`
  If the historic recognized revenue does not correspond to the relation of previously expired duration and complete duration, then Revenue Accounting calculates and posts a backlog correction. You can avoid such a backlog correction by implementing a specific deferral method in *BAdI* `FARR_BADI_DEFERRAL_METHOD`.
- Invoiced amount in operational application and general ledger
- Recognized revenue in the legacy system and general ledger
- Aggregated negative differences for each contract of recognized revenue minus invoiced amount must be equal to the balance of corresponding deferred revenue accounts in the general ledger
- Aggregated positive differences for each contract of recognized revenue minus invoiced amount must be equal to the balance of corresponding unbilled receivable accounts in the general ledger

Even if the aggregated difference between recognized revenue minus invoiced amount for each contract is equal to the balance of the corresponding accounts for deferred revenue and unbilled receivables in the contract

currency, deviations may exist in the local currency if the legacy system has transferred invoiced amounts and revenue in foreign currencies with different exchange rates to the local currency. For example, this situation may occur if your legacy revenue accounting system is based on SD Revenue Recognition. You must either adjust the historic recognized revenue in local currency and the historic invoice amount in local currency, or post adjustments to the affected general ledger accounts of deferred revenue and unbilled receivables. Otherwise, future fulfillments and invoices posted by Revenue Accounting do not clear the existing balance in local currency.

If you do not want to manage all contracts within Revenue Accounting and therefore do not load all of the existing contracts to the Revenue Accounting system, the balances of the accounts for deferred revenue and unbilled receivables may not match the aggregated balances of the contracts that are loaded to Revenue Accounting. In this case, you must separate the aggregated balances of those contracts that are loaded to Revenue Accounting from those that are not loaded in order to reconcile balances after the initial load.

In general, we recommend that you use separate accounts for revenue, deferred revenue and unbilled receivables for contracts that are managed by Revenue Accounting, and for those that are not.

SAP does not offer any special reports or tools to check consistency of revenue data in a legacy revenue accounting system and general ledger before the initial load, but only offers reports to explain the relevant amounts in Revenue Accounting.

13.1.2.1.3 Testing

The migration needs to be tested completely and thoroughly.

We recommend that you test the operational load, as well as the initial load with a complete set of productive data in a test system.

For further details, please check chapter 1.2.6.

13.1.2.1.4 Settings in the Revenue Accounting and Reporting

You can perform migration for one or several company codes at a time.

The general configuration of Revenue Accounting must be finalized for each company code to be loaded. All accounting principles that are relevant for these company codes must be completely implemented.

SAP highly recommends that you define all BRFplus rules before executing the initial load. Any changes made to operational items after executing the initial load will also trigger new derivation of performance obligation attributes by BRFplus. So if BRFplus rules have already been tested in the initial load, you can detect any undesired results of the defined rules beforehand.

Once you have assigned supported company codes to accounting principles in Customizing: *Financial Accounting (New)* > *Revenue Accounting* > *Revenue Accounting Contracts* > *Assign Company Codes to Accounting Principles*, you can define which accounting principles are relevant to a company code. Although you can maintain the transfer date when you assign each accounting principle to a company code, the transfer date of all accounting principles of a company code must be identical.

To execute the operational load and initial load, the status of the company codes has to be set to *Migration* in all accounting principles. You can only process events that belong to a period after the transfer date when the status is no longer set to *Migration*.

You may want to transfer independent packages of contracts to Revenue Accounting on different transfer dates because it is impossible to manage a complete transfer on the same transfer date. For every transfer date, you have to define a separate migration package. Also see information about packaged migration in the chapter *Migration by Package*. When you assign company codes to accounting principles, the transfer date and the status can then be defined for each company code and migration package.

13.1.2.1.5 Settings in the Sender System

You have to activate the integration of the sender component with Revenue Accounting before executing the operational load. By doing this, you can ensure that any event that occurs for a document after it has been processed by the operational load, is transferred to Revenue Accounting.

When you activate the integration, new documents are also transferred immediately to Revenue Accounting. None of these documents are processed in Revenue Accounting while the status of the company code and migration package is set to *Migration*.

13.1.2.2 Operational Load in Sender System

13.1.2.2.1 Creating Revenue Accounting Items

The operational load creates revenue accounting items (RAIs) that can then be processed with transaction `FARR_RAI_PROC_LOAD`. You have to ensure that every relevant document in the sender component is selected.

If open contracts are to be migrated to Revenue Accounting, you have to create similar revenue accounting items for normal document processing at a later stage. The following points need to be considered:

- There should be an operational load program which selects documents that are relevant to revenue recognition and transfers them to Revenue Accounting. The parameter `iv_initial_load` must be set when revenue accounting items are created with the generated RFC-enabled function modules for creating revenue accounting items.
- For order items that will be migrated, the timestamp needs to be set to the date on which the order was created.
- The conditions defined in the revenue accounting items represent the order item amount without allocation. If an allocation effect exists in the sender system, it needs to be passed with the legacy data (see the next chapter).
- The operational load must select and transfer all related documents such as invoices, credit memos, debit memos, and fulfillments. You must ensure that all documents contributing to the contract in Revenue Accounting will be selected by the operational load.
- If all historic fulfillment events, such as goods issues and invoices, are loaded to Revenue Accounting with separate revenue accounting items, an audit trail can still be carried out for the entire history of a contract.
- For event-based and manual fulfillments, the corresponding fulfillment revenue accounting items must be created. The fulfilled quantity of a performance obligation on the transfer date is determined by all fulfillment entries that have an event date earlier than or on the transfer date. If the history of events is not important,

you can also create one cumulative event with an event date earlier than or on the transfer date which then represents the quantity that is already fulfilled in the legacy revenue accounting system.

- Invoices with a posting date earlier than or on the transfer date are assumed to be posted in the legacy revenue accounting system. Revenue Accounting will not create invoice correction postings for the invoices.
- If the operational load supports packaged migration, it must define unique and disjoint sets of document items and assign migration package IDs to them.
- The operational load program, or an additional program, also needs to calculate and transfer the legacy data as described in the following chapter.

13.1.2.2.2 Creating Legacy Data

Legacy data needs to be created for each revenue accounting item (RAI) that represents an order item with a revenue accounting item timestamp before or on the transfer date.

The most important legacy data information is as follows:

- Fulfilled quantity on transfer date for event-based fulfillment
- Invoiced amount on transfer date

Additional data that may exist in a separate or legacy revenue accounting system is listed as follows:

- Standalone selling price (SSP)
- Allocated price
- Recognized revenue on transfer date

Linked or additional performance obligations (POBs) cannot be transferred from a legacy system.

You have to create legacy data for all active accounting principles. You can obtain the relevant accounting principles of a company code by calling the remote-enabled function module `FARR_INITIAL_LOAD_STATUS_API`.

Operational load programs for SAP-supported scenarios usually already offer the possibility to create the legacy data. If the operational load does not support the automatic creation of legacy data, or if the legacy data created by the operational load does not contain all the information from your legacy revenue accounting system, you need to create your own legacy data.

You can transfer legacy data for the revenue accounting items that have been created by the operational load by calling function module `FARR_LEGACY_DATA_CREATE_API` in remote function call (RFC) mode.

The interface has three parameters which are described in the following sections:

- `IT_LEGACY_MAIN`: line type `FARR_S_LEGACY_API`
- `IT_LEGACY_COND`: line type `FARR_S_LEGACYC_API`
- `IT_LEGACY_SF`: line type `FARR_S_LEGACYSF_API`

The RAI monitor can display legacy data. To enable it, you have to personalize the monitor by choosing the *Personalize* button in the toolbar on the selection screen. You can choose whether to enable the display with legacy data. The display with legacy data must be activated manually, as the legacy data is only relevant in the migration phase. The display is no longer useful after the migration phase.

Data in IT_LEGACY_MAIN: main legacy data information

You can only deliver one entry in IT_LEGACY_MAIN for each revenue accounting item and accounting principle. The standard interface cannot create linked or additional performance obligations. If no legacy revenue data exists for an item, a dummy entry needs to be sent. This dummy entry must contain the key fields SRCDOC_* and ACCT_PRINCIPLE, as well as the company code. By sending this dummy entry, Revenue Accounting is explicitly informed that no legacy data exists and that no legacy data is missing. The key fields SRCDOC_COMP, SRCDOC_LOGSYS, SRCDOC_TYPE and SRCDOC_ID have to be identical to the corresponding revenue accounting item created by the operational load.

In IT_LEGACY_MAIN, you can transfer nearly every performance obligation attribute. Many of these attributes can also be populated in BRFplus. You should therefore ensure that the performance obligation is created as expected, as BRFplus is called during initial load and may fill fields that are not specified in the legacy data. Information that you deliver directly in the legacy data will overwrite the fields that will be determined in BRFplus. In general, it is recommended to derive the attributes in BRFplus rather than filling them in the legacy interface.

The fields QUANTITY_FULFILL and QUANTITY_UNIT allow you to specify a percentage of completion (PoC) for time-based performance obligations that does not match the time passed from the start date of the performance obligation to the transfer date. For example, if the performance obligation has a runtime of 12 months and 3 months have passed by the transfer date, but the legacy system calculated a percentage of completion of 30%, you can enter 30% of the performance obligation quantity into this field. The fields can usually be left blank as Revenue Accounting calculates the percentage of completion according to the time passed until the transfer date.

For performance obligations with event-based fulfillment, the fulfilled quantity will be delivered by the operational load in the form of fulfillment revenue accounting items. For performance obligations with manual fulfillment, you have to create fulfillment revenue accounting items for the historic fulfillments in the legacy system.

The NO_RECOG field should not be set. It should only be used after consulting with SAP.

The ALLOC_DIFFERENCE field must contain the difference between the allocated price from the legacy system and the contractual price from the operational system. If you want to prevent Revenue Accounting from automatically recalculating the allocated price for a future contract change, then you should set the MANUAL_ALLOCATION field. When you set this field, any change from the operational system that would trigger a recalculation of the allocated price will put the contract into a work list to be manually checked.

To transition smoothly from a legacy revenue accounting system to Revenue Accounting with regards to local currency handling, you have to provide the correct exchange rate information in the legacy data (fields EXCHANGE_RATE, EXCHANGE_RATE2, and EXCHANGE_RATE3 in parameter IT_LEGACY_MAIN of function module FARR_LEGACY_DATA_CREATE_API).

The objective is to provide Revenue Accounting with the information it needs to continue with the local currency calculation in a way that the balance sheet accounts (such as the unbilled receivables account or the deferred revenues account) have a balance in local currencies at the end.

The legacy data does not contain information about the local currency balances of these accounts. Instead, these figures are calculated within Revenue Accounting. To calculate these figures, Revenue Accounting needs an exchange rate which represents the balance between all posted revenues and all posted invoices in the local currencies.

Revenue Accounting 1.2, as well as lower releases, only support fixed exchange rates. This means that each contract has its own exchange rate and all revenues for the contract are posted with that exchange rate. To set the contract exchange rate, you have to use the same exchange rate for all items that belong to the same operational document.

Example

A sales order, which is relevant for Revenue Accounting, has 2 items. The first item posted an invoice of 100/110, the second 100/120. The first item posted revenue of 80/90.

From this data, revenue accounting calculates a deferred balance of (100+100-80)/(110+120-90) = 120/140. The exchange rate is 1,167. The respective `EXCHANGE_RATE` fields need to be filled with this value in the legacy data in Revenue Accounting if the legacy system did not post any exchange rate differences.

Revenue Accounting will then use this rate to recognize future revenues and will therefore ensure that the deferred account will have a balance of 0 at the end in both the transaction and local currency.

Example

As above, except that the legacy Revenue Accounting system (for example, SD Revrec) is configured to use the `FASB52` approach which ensures a fixed rate for the deferred revenue account with the same event. You can assume that the first invoice comes first with the rate 1.1, which fixes the rate on the deferred revenue account.

When the second invoice comes in, the deferred revenue account will be 200/220 and the difference of 10 is posted to the exchange rate differences (gain). When the revenue is posted, deferred revenue will be reduced by 80/88 – the difference of 2 will be posted again to the exchange rate differences (which adds up to 8). In this case, the exchange rate to be transferred to Revenue Accounting is 1.1, as it reflects the revenue that still needs to be recognized (120/132).

It could also be calculated in the following way: all invoices + exchange rate differences – all revenue postings: 200/230 + 0/-8 - 80/90 = 120/132.

The same is true if the contract is in an unbilled position (revenue > invoice). If the contract is balanced (revenue = invoice), the exchange rate for the contract can be chosen freely or simply left empty.

Note

Important: to calculate the exchange rate, it is important to only take the documents (revenue, invoice) posted before the transfer date into account, in other words, those that are part of the legacy data. The exchange rate can also be left empty if the deferred/unbilled accounts do not need to have a zero balance in local currencies once the contract has been finalized.

Data in IT_LEGACY_COND: Legacy Data for Conditions

This interface should deliver the historic, cumulated recognized revenue on the transfer date in contract currency and local currency for each condition type. The local currency amounts must not be zero.

Note

The foreign currency amount is nonzero.

If the `ALLOC_DIFFERENCE` field in `IT_LEGACY_MAIN` is not zero, the recognized revenue must be split between the original condition and the allocation effect (or allocation difference). The recognized allocation effect has to be

delivered with the condition type that is defined in Customizing: *Financial Accounting (New)* > *Revenue Accounting* > *Revenue Accounting Contracts* > *Condition Types* > *Define Reserved Condition Types*.

Data in IT_LEGACY_SF: Legacy Data for Scheduled Fulfillments

This interface is only required if you have already defined special revenue schedules for time-based fulfillments after the transfer date in your legacy system and you want to continue to use them. The revenue amounts to be recognized have to be delivered in contract currency. The sum of all amounts, plus the historic recognized revenue, must add up to the allocated price of the performance obligation.

> **Note**
>
> Do not use the quantity field because it is ignored.

13.1.2.3 Initial Load in Revenue Accounting

After creating revenue accounting items (RAIs) with operational load and delivering corresponding legacy data, you can start processing the loaded data separately for each accounting principle, company code, and migration package using transaction `FARR_RAI_PROC_LOAD`. Only those revenue accounting items that have been created by operational load with the date (see table below) up to the transfer date are processed. Other revenue accounting items created via the normal integration, or with a date later than the transfer date, are not processed. They are processed via transaction `FARR_RAI_PROC` as soon as the migration package for the company code is no longer in *Migration*.

In order to differentiate revenue accounting items that belong to the period up to, or after, the transfer date, an initial load indicator `INITIAL_LOAD` is set before these revenue accounting items are processed:

Table 130:

RAI class type	Process that sets the initial load indicator	Date used to set the initial load indicator
Order Item	RAI-Creation	Timestamp
Fulfillment Item	RAI-Transfer	Event Date
Invoice Item	RAI-Transfer	Posting Date

If the date used to set the initial load indicator is before or on the transfer date, the initial load indicator is set to “Initial Load Due to New Co. Code or Migr. Package”(`INITIAL_LOAD` = 1). If the date used to set the initial load indicator is after the transfer date, the initial load indicator is set to “No Initial Load”(`INITIAL_LOAD` = space).

When the initial load processes revenue accounting items of revenue accounting item class type “order item”, the corresponding legacy data is taken into account and is required if the `INITIAL_LOAD` field is set to 1. In this case, the corresponding legacy data has to be transferred prior to processing using function module `FARR_LEGACY_DATA_CREATE_API`.

The revenue accounting items are processed in almost the same way as revenue accounting items that are created via the usual integration. BRFplus rules are used to derive the performance obligation (POB) attributes from attributes in the operational data. In BRFplus, you can define special rules for revenue accounting items that have the `INITIAL_LOAD` indicator set. If the legacy interface has delivered deviating attributes, a warning message is issued in the message log and the data from the legacy interface is used in the performance obligation.

> **Note**
>
> The initial load `TA FARR_RAI_PROC_LOAD` only supports the creation of new Revenue Accounting contracts. The initial load does not support changes to Revenue Accounting contracts that already exist.
>
> In the initial load `TA FARR_RAI_PROC_LOAD`, you cannot combine performance obligations (POBs), resulting from revenue accounting items from different migration packages, in one revenue accounting contract.
>
> You can manually combine performance obligations in Revenue Accounting, as soon as the migration packages are set to *Productive*.

13.1.2.4 Reconciliation of Loaded Data

Once all revenue accounting items (RAIs) of a migration package and company code up to the transfer date have been processed, the balances of the loaded contracts have to be reconciled with the balances of general ledger accounts of deferred revenue and unbilled receivables:

- Aggregated negative differences for each contract of recognized revenue minus the invoiced amount, must be equal to the balance of the corresponding deferred revenue accounts in FI-GL
- Aggregated positive differences for each contract of recognized revenue minus the invoiced amount, must be equal to the balance of the corresponding unbilled receivables accounts in FI-GL

The absolute amounts of historic recognized revenue and historic invoiced amounts can be reconciled with the corresponding amounts in your legacy system only if the legacy system offers a report with a selection of contracts that should have been transferred to Revenue Accounting.

> **Note**
>
> SAP does not deliver a report of cumulated amounts from the initial load. So you have to create your own report.

13.1.2.5 Marking Company Codes or Migration Packages as Productive

Once all revenue accounting items (RAIs) from the operational load with a posting date up to the transfer date (for a migration package or even a complete company code) have been processed successfully, and cumulated values have been reconciled successfully for an accounting principle, you can set the migration package for the company code, or even the complete company code, to *Productive*.

This should be done for all accounting principles at the same time.

When a company code or migration package has been set to productive, new revenue accounting items from events that have occurred before the transfer date can no longer be processed.

When the status is *Productive*, you can start processing revenue accounting items from events that have occurred after the transfer date by using transaction `FARR_RAI_PROC`. From now on, the accrual run can be run in posting mode. Contracts and performance obligations (POBs) from the initial load are now managed in the same way as newly created contracts and performance obligations are transferred via the normal integration.

13.1.2.6 Testing Migration

Operational load and initial load need to be tested completely and thoroughly. We recommend testing the migration in a Revenue Accounting test system with a complete set of productive data.

Operational load in simulation mode only performs technical checks of data that will be loaded. Complete testing therefore requires data to be loaded into a test system. You should then start the initial load in this test system.

Processing events from the operational application between the transfer date and execution date of the operational load, and events after the execution date, must also be tested. In a test system, you can also execute an accrual run for a company code that is in *Migration*. You must test the accrual run for at least the first period after the transfer date to make sure that valuation in Revenue Accounting is consistent with valuation in legacy systems. If there is a discrepant valuation, the first accrual run can post corresponding positive or negative backlog of revenue from old contracts.

If the operational load has created revenue accounting items that cannot be processed without errors and that should not have been created in the first place, you have to delete all data for the loaded migration package of a company code with transaction `FARR_IL_CLEANUP` and rerun the complete initial load for the migration package or company code. If only a few revenue accounting items need to be deleted, you can also use the single header ID selection in transaction `FARR_IL_CLEANUP`. You can no longer delete initial load data once a package or company code has been set to *Productive*.

It is possible to set a migration package or a company code back to *Migration* in test systems to repeat an initial load if serious issues are found. Before doing so, all accrual runs that have been posted to the general ledger must be reversed.

After the cleanup in Revenue Accounting, you can correct faulty source data in the sender system or faulty configurations. To do this, you may need to reset data in the sender system, for example a special indicator marks documents which are relevant for Revenue Accounting. This indicator has to be cleared to enable a new operational load for this document. After this reset, you can rerun operational load, as well as initial load.

13.2 Supported Scenarios

13.2.1 Sales and Distribution

Use

In the “Sales and Distribution” scenario, all order, fulfillment and invoice items that belong to a revenue accounting contract in Revenue Accounting originate in SAP Sales and Distribution (SD).

You don’t need to define a migration package for the first transfer. This means that you can set a company code in Revenue Accounting to *Productive* and decide later whether, or when, you want to transfer additional migration packages.

Packaged migration is optional for the sender component SD. Assigning order items to a migration package can either be done in the revenue accounting item (RAI) settings in Customizing: *Sales and Distribution* > *Revenue Accounting and Reporting* > *Maintain Revenue Accounting Item Settings* or in method `DETERMINE_MIG_PACKAGE` of BAdI `FARRIC_BADI_ORDER`.

Prerequisites

The following settings are relevant for integration to Revenue Accounting in SD:

- Revenue accounting item settings
  Revenue accounting item settings are maintained in Customizing: *Sales and Distribution* > *Revenue Accounting and Reporting* > *Maintain Revenue Accounting Item Settings*.
  These settings determine which items are relevant to Revenue Accounting. Operational load only selects relevant items according to this configuration.
  If you want to use a migration package, you have to enter it here as “package ID”. The first operational load can also take place without using a migration package. In this case, the package ID is blank. If additional migration packages are migrated after the first operational load, you have to maintain the relevant migration package.
- If the criteria in the above-mentioned setting such as sales organization, sales document type, and item category are insufficient for determining the migration package, you can implement additional rules in method `DETERMINE_MIG_PACKAGE` of BAdI `FARRIC_BADI_ORDER` to exclude items from a migration package.
- Integrate with Revenue Accounting
  The SD integration component has to be activated before executing the operational load. This ensures that any event that occurs for an SD document after it has been processed by operational load is transferred to Revenue Accounting by the integration component. New documents are transferred immediately to Revenue Accounting when you activate the SD integration component in Customizing: *Sales and Distribution* > *Revenue Accounting and Reporting* > *Integrate with Revenue Accounting*. New documents are not processed while the company code is in *Migration*.

Activities

Operational Load

The operational load of data from SD is performed with transaction FARRIC_OL. It creates revenue accounting items that can then be processed in Revenue Accounting with transaction FARR_RAI_PROC_LOAD (prior to the transfer date) or transaction FARR_RAI_PROC (after the transfer date).

You can run the operational load for specific company codes and migration packages at the same time. The program provides additional selection criteria so that you can run the load on a step-by-step basis, particularly for testing purposes. If you use this additional selection criteria for the migration, you have to ensure that each relevant sales document is only selected once.

The operational load from SD loads all historic fulfilment and invoice events, and transfers them to Revenue Accounting where they are processed separately. A separate load of order items with related fulfillment and billing documents for test purposes is only possible with transaction FARRIC_OL_EXPERT.

If you have used SD Revenue Recognition, the operational load will transfer recognized revenue from SD Revenue Recognition. If you want to transfer historic recognized revenue or other data from a legacy system other than SD Revenue Recognition, you have to use transaction FARRIC_OL_EXPERT and switch off the checkbox *Create Legacy Data*. Then legacy data must be delivered for each operational item selected with the legacy interface described in the Creation of Legacy Data [page 180] chapter.

> **Note**
>
> You need to run transaction FARRIC_OL_EXPERT carefully. Consider cases where not all information comes from SD. Some information may not exist or be reliable. In such cases, the corresponding data has to be loaded by using custom revenue accounting item classes. In expert mode, you can suppress processing of invoices, goods issues and legacy data. Before you use this transaction, please contact SAP to verify whether the migration will work correctly and thoroughly.

To enhance performance, the *Synchronous Online Processing* checkbox should only be set for test runs with a small number of sales documents for different purposes, such as debugging.

Testing

As already described in the *Testing Migration* chapter, you should thoroughly test the operational load in SD.

After a cleanup in Revenue Accounting, you can use transaction FARRIC_OL to reset orders, goods issues, and invoices to the state they were in before the operational load. The revenue accounting relevance indicator, as well as the migration package, are deleted from the loaded SD documents.

You can start the operational load again afterwards.

13.2.2 Customer Relationship Management, Service Application

Use

In scenario “Customer Relationship Management” (Sender Component “CRS”) all order and invoice items that belong to a revenue accounting contract in SAP Revenue Accounting and Reporting (Revenue Accounting) originate in SAP Customer Relationship Management (CRM).

For the first takeover, you do not need to define a migration package. So you can set a company code in Revenue Accounting to the status *Productive* and later decide whether or when you want to take over additional migration packages.

Packaged migration is optional for sender component `CRS`. The assignment to a migration package can be done in the revenue accounting item (RAI) settings in CRM Customizing under *Customer Relationship Management* > *Transactions* > *Settings for Service Transactions* > *Integration* > *Revenue Accounting Integration*:

- *Define Relevance Type for Revenue Accounting*
- *BAdI: Determine Relevance Type and Reference for Revenue Accounting*
  In method `GET_RELEVANCE_TYPE` of enhancement spot `CRM_SRV_REVACC_REL`

Prerequisites

The following settings are relevant to the migration of CRM data to Revenue Accounting:

- Revenue accounting item settings
  RAI settings are maintained in CRM Customizing under *Customer Relationship Management* > *Transactions* > *Settings for Service Transactions* > *Integration* > *Revenue Accounting Integration* > *Define Relevance Type for Revenue Accounting*.
  These settings determine which items are relevant to Revenue Accounting. Operational load only selects relevant items according to this configuration.
  If you want to use a migration package, you have to enter in this Customizing activity under *Package ID*. The first operational load can also take place without using a migration package. In this case, the *Package ID* remains empty.
  In case you want to migrate additional migration packages after the first operational load, you have to enter the relevant migration package.

  > **Note**
  >
  > If the criteria in the before mentioned setting such as service organization, sales organization, business transaction type, and item category are insufficient for determining the migration package, you can implement additional rules in method `EXCLUDE_TRANSACTION_ITEMS` of enhancement spot `CRM_SERVICE_REVACC_RELEVANCE` to exclude items from a migration package in CRM Customizing under *Customer Relationship Management* > *Transactions* > *Settings for Service Transactions* > *Integration* > *Revenue Accounting Integration* > *Business Add-Ins for Revenue Accounting Integration* > *BAdI: Exclude Transaction Items from Operational Load*.

- SAP ERP (ERP) Customizing settings
  You make the following settings in the enhancement spot `CRM_SRV_ACC_REV` in ERP Customizing under *Integration with Other SAP Components* > *Customer Relationship Management* > *Settings for Service Processing* > *Revenue Accounting Integration* > *BAdI: Mapping of Data to Revenue Accounting*:
  - Revenue accounting order items of the operational load can be enriched or changed by implementing method `MAP_SRV_TO_ACCOUNT_REVENUE`.
  - Revenue accounting invoice items of the operational load can be enriched or changed by implementing method `MAP_BILL_TO_ACCOUNT_REVENUE`.
  - Legacy data can be enriched or changed by implementing method `MAP_LEGACY_DATA_TO_ACC_REV`.

- Integration with Revenue Accounting
  Activate the CRM integration before productive execution of the operational load so that any event that occurs for a CRM document after it has been processed by operational load is transferred to Revenue Accounting.
  New documents will be transferred immediately to Revenue Accounting by activating the CRM integration with the following Customizing activities in ERP Customizing under *Integration with Other SAP Components* > *Customer Relationship Management* > *Settings for Service Processing* > *Revenue Accounting Integration*:
  - *Define RFC Destination*
  - *Activate Integration to Revenue Accounting*

  > **Note**
  >
  > New documents will not be processed as long as the company code is in status *Migration* in Revenue Accounting Customizing activity *Assign Company Codes to Accounting Principles*.

- Implement the SAP Note 2341693 to prevent inconsistencies during the migration of your CRM documents.

Activities

Operational Load

The operational load of data from CRM is performed in several steps. The steps have to be executed in a fixed sequence:

1. In your CRM system, choose transaction `CRM_SRV_REVACC_ER` to enrich your CRM service transactions with reference type and reference ID.
2. In your CRM system, choose transaction `CRM_SRV_REVACC_ERSD` to enrich your follow-up documents in ERP. These are debit memo requests which are used for billing in SAP Sales and Distribution (SD) of CRM service transactions and sales orders which result from CRM bundle package quotations. This step can be skipped if service transactions are not billed in SD or package quotations with sales orders are not used.
3. In your CRM system, choose transaction `CRM_SRV_REVACC_OL` to set the relevance type for CRM service contracts and service orders, and service confirmation according to Customizing. For follow-up billing documents and due list items in CRM, the relevance type is passed on. It creates RAIs for orders and invoices and transfers legacy data.
4. In your ERP system, choose transaction `FARRIC_OL` to load RAIs for debit memo requests and sales orders which are created from CRM.
   This step can be skipped if service transactions are not billed in SD or package quotations with sales orders are not used.
5. In your Revenue Accounting system, choose the following transactions to process an initial load of the RAIs in Revenue Accounting:
   - `FARR_RAI_PROC_LOAD` (prior to transfer date)
   - `FARR_RAI_PROC` (after transfer date)

You can run the operational load for specific company codes and migration packages at a time. The program provides additional selections so that you can run the load step-wise particularly for testing purposes. If you use these additional selections for a productive migration, you have to make sure that every relevant document is selected only once.

The operational load from CRM loads all historic billing documents in CRM and transfers them as legacy data to Revenue Accounting where they are processed separately. If billing in SD is used or if SD sales orders are created from CRM bundle package quotations, the operational load in SD has to be executed for these documents.

For a better performance of your CRM system the *Synchronous Processing* indicator should only be set for test runs with a selection of a small number of documents for some purposes such as debugging.

Testing

You have to test the operational load in CRM (and SD) thoroughly. For more information, see Testing of Migration [page 185].

After a cleanup in Revenue Accounting, you can use transaction `CRM_SRV_REVACC_OL` in your CRM system to reset business transactions, billing documents and due list items to the state they had before the operational load. The Revenue Accounting *Relevance* indicator is deleted from the loaded CRM documents. The reset of SD orders and invoices can be done with transaction `FARRIC_OL` in SD.

Reference IDs and types that were written into CRM business transactions cannot be reset. But it is possible to repeat data enrichment and to overwrite the references with new values. Afterwards you can start the operational load again.

13.2.2.1 SAP CRM: Revenue Recognition Migration

Use

In SAP Customer Relationship Management (CRM), you can use two different solutions for the revenue recognition of your sales and service business transaction data:

- Revenue recognition based on the results analysis
- Revenue recognition based on SAP Revenue Accounting and Reporting (Revenue Accounting)

Integration

The following processes are supported.

Existing Service Contracts

To migrate from your current revenue recognition process based on the results analysis **for existing service contracts** to the revenue recognition process integrated with Revenue Accounting, you have to follow these steps:

1. During the posting period, until the transfer date is reached, perform your usual revenue recognition process one more time followed by the usual order settlement process.
2. Change your existing revenue recognition process to the final results analysis. Usually, the final results analysis is only used for completed internal orders, but for the switch to revenue recognition integrated with Revenue Accounting, you have to do the final result analysis for each of your relevant internal orders independent of their status (such as status *open*). You set this switch to the final result analysis by modifying the results analysis key (RA key) which is part of the internal order Customizing in your Controlling system

under *Controlling* > *Product Cost Controlling* > *Cost Object Controlling* > *Product Cost by Sales Order* > *Period-End Closing* > *Results Analysis* > *Define Valuation Methods for Results Analysis*.

> **Note**
>
> In this Customizing setting, you do not change the RA key itself, but you set the RA key that is used for the internal order under *Valuation* > *Final RA* to **x** for each status.

3. Set up Revenue Accounting with the revenue-based integration to the results analysis by maintaining the following views in your Revenue Accounting system using transaction `SM30`:
   - `V_TKKA_RR_AC`
   - `V_TKKA_RR_ME`

   For more information, see documentation in Customizing under *Financial Accounting* > *Revenue Accounting* > *Integration with Cost Object Controlling*:
   - *Assign RA Version and Currency Type to Company Code and Acct. Principle*
   - *Specify RA Keys and RA Versions that will Integrate with Revenue Acct.*
4. Perform the operational load in your CRM system and inital load in your Revenue Accounting system.
   Fore more information, see Customer Relationship Management, Service Application [page 187].
5. For all following period-end closing processes, you have to first perform the accrual in Revenue Accounting including the posting for the internal order. Then, you perform the final results analysis including results analysis and the order settlement processes.

> **Note**
>
> Continue this process until all your existing migrated service contracts have expired and are completed. During this contract duration, you have to run both revenue recognition processes in parallel.

Parallel Process During Contact Duration

When you use the revenue recognition process based on the results analysis for your CRM sales and service business transaction data and the integration with Revenue Accounting in parallel, the following priority rule applies, depending on your system setup:

- **Relevance Set During Creation of Service Contract Item**
  If you have set up revenue recognition based on the result analysis and based on Revenue Accounting for an item category of a service contract, the following rule applies when you **create a new item**: the relevance type is set and the revenue recognition type is ignored. The process for Revenue Accounting has priority over the process for results analysis.
  Set up the following:
  - A revenue recognition type for revenue recognition based on the result analysis
    You have set the revenue recognition type `SCN` *CRM Service Contract Item* in Customizing for CRM under *Transactions* > *Basis Settings* > *Define Item Categories*.
  - A relevance type for revenue recognition based on Revenue Accounting
    You have set the relevance type in Customizing for CRM under *Transactions* > *Settings for Service Transactions* > *Integration* > *Revenue Accounting Integration* > *Define Relevance Type for Revenue Accounting*.
- **Relevance Set During Operational Load**
  If the relevance type for the item has been set by operational load, the revenue recognition type is **not** ignored. It gets sent to both the results analysis **and** Revenue Accounting.

> **Note**
>
> If you want to use this process, you have to set up Revenue Accounting using the revenue based integration with results analysis for your performance obligation. For service contracts that were loaded using operational load, you can only run a final results analysis.

New Service Contracts

When you already use the revenue recognition process based on the results analysis **for new contracts** and migrate to the revenue recognition process integrated with Revenue Accounting, set up Customizing as described above in section for *Existing Service Contracts*, but without setting up the revenue-based integration with the results analysis. The process for Revenue Accounting has priority over the process for results analysis.

> **Note**
>
> This process only works for mass controlling, meaning without internal order, but with a profitability segment instead.

13.2.3 Hybris Billing

Use

In an SAP Hybris Billing or Billing and Revenue Innovation Management (BRIM) scenario, all order, fulfillment and invoice items that belong to a revenue accounting contract in Revenue Accounting originate from SAP Convergent Invoicing (services and hardware).

In this scenario, a hardware sale is modelled in such a way that one-off charges are created in Convergent Invoicing.

> **Note**
>
> Only packaged migration is supported for Hybris Billing. As a prerequisite, the company code and accounting principle combination, without a migration package, must be productive, and the transfer date of the migration packages must be the same, or later than, the transfer date of the company code and accounting principle combination that is already productive.

> **Note**
>
> The time-based, as well as event-based, deferred revenues in FI-CA are not considered during the operational load.

Prerequisites

Before starting with the operational load for Hybris Billing, you have to maintain all the necessary Customizing activities in Convergent Invoicing:

- Define Service Types
  Define the service types that are relevant in the context of your provider contracts in Customizing: *Financial Accounting (New)* > *Contract Accounts Receivable and Payable* > *Integration* > *Revenue Accounting* > *Define Service Types*. In addition, set the indicators for order item, one-off charge, fulfillment item, and invoice item to specify which types of revenue accounting items (RAIs) are to be created for each service type.
- Assign Service IDs to Service Types
  SAP Customer Relationship Management (CRM) does not recognize service types. Instead, it deals with Service IDs. You have to assign the service IDs to service types so that the relevant service types of a provider contract item can be determined when a provider contract is replicated from SAP CRM. Determination also takes place when provider contracts are enriched to prepare for the operational load. You perform the assignment in Customizing: *Financial Accounting (New)* > *Contract Accounts Receivable and Payable* > *Integration* > *Revenue Accounting* > *Assign Service IDs to Service Types*.
- Since service types are not currently known in the system, it is essential to maintain how those would be determined in future. We recommend that you determine a maximum of one service type per combination for the main and sub transaction. This can be done separately for one-off charges, as well as billable items in general:
  - For one-off charges, maintain Customizing in *Financial Accounting (New)* > *Contract Accounts Receivable and Payable* > *Integration* > *Customer Relationship Management* > *Transfer of One-Off Charges* > *Define Main Transactions and Subtransactions*.
  - For billable items in general, maintain Customizing in *Financial Accounting (New)* > *Contract Accounts Receivable and Payable* > *Convergent Invoicing* > *Basic Functions* > *Billable Items* > *Billable Item Transfer* > *Account Assignment Derivation* > *Define Main and Subtransactions for Items with Product Account Assignment*.

  The service type is not yet available in existing billable items and billing documents. For operational load, the two settings mentioned above are interpreted to find the right service type. If the system cannot determine the service type unambiguously during the operational load, you will receive an error message.
- Activate provider contract items for Revenue Accounting
  You can maintain which provider contract items are considered relevant for revenue accounting In Customizing: *Financial Accounting (New)* > *Contract Accounts Receivable and Payable* > *Integration* > *Revenue Accounting* > *Activate Provider Contract Items for Revenue Accounting*. If the key fields of the posting area provided are not sufficient, you can also use FI-CA event 0558 for implementing your logic. In a full Hybris Billing scenario, the reference ID of a provider contract item is replicated from SAP CRM. You should make sure that only provider contract items, in which the reference ID is already available, are considered relevant to revenue accounting by appropriately implementing event 0558. If you do not ensure this via event 0558, it can happen that revenue accounting relevance is already set and thus revenue accounting items are created even though the full information is not yet presented in the provider contract.
- Define number ranges for revenue accounting item IDs
  You need to define number ranges for revenue accounting item IDs. The numbers from the number range form part of an ID that is created by a program.
- Activate integration with Revenue Accounting

You have to activate the integration with Revenue Accounting, before executing the operational load, in Customizing: *Financial Accounting (New)* > *Contract Accounts Receivable and Payable* > *Integration* > *Revenue Accounting* > *Activate Integration with Revenue Accounting*. New provider contracts and their related documents will then automatically be considered for creating revenue accounting items. The corresponding revenue accounting items are not processed while the migration package is in *Migration*.

Activities

Operational Load

Before you can start the operational load in Convergent Invoicing, you must enrich the provider contracts in Convergent Invoicing with information that is relevant for revenue accounting from SAP CRM. For this purpose, there are two reports in SAP CRM:

1. Report `CRM_ISX_REVACC_MIG_ENRICH_CRM2`
   This report enriches the existing provider sales orders and provider contracts in SAP CRM. It also determines the relevant enrichment data for provider contracts in Convergent Invoicing. This data is written to an enrichment database that is considered in the next report.
2. Report `CRM_ISX_REVACC_MIG_ENRICH_FICA`
   This report needs to be executed in FI-CA mode: It enriches the provider contracts in Hybris Billing with the data from the previously populated enrichment database. Function module `FKK_VT_MIG_RA_ENRICH` is used to enrich the data in the provider contract in SAP CI.

Once the enrichment has been finished successfully for all relevant provider contracts, you can start the operational load in Convergent Invoicing. To achieve this, you can call up transaction `FP_RAI_OL`. The operational load is divided into two steps which can be found under the *Loading of Provider Contracts* mode.

1. Create migration package
   You have to enter the migration package that will be used in this operational load run. In this step, all the provider contract items that meet the selection criteria and that are not yet marked as relevant for revenue accounting, will be checked to see if they are relevant for revenue accounting. Newly created provider contract items that meet the same selection criteria will **not** end up in the same migration package. The company code and accounting principle combination without a migration package must therefore be productive.

   > **Note**
   >
   > Cancelled provider contract items are not taken into account.

   If a provider contract item is determined as relevant for revenue accounting (posting area 0510 and FI-CA event 0558 are considered for the determination), it will be updated accordingly: Field `RAREL` is set to value X and the migration package is transferred. In addition to the update of the provider contract item, corresponding order item revenue accounting items will be created.
   Furthermore, an entry is written in the migration status table `DFKKRA_MIG` so that the subsequent step can continue from there.
   If you want to adapt the order item revenue accounting items, you can do so when they are created using FI-CA event 8205.

> **Note**
>
> This event is also processed when normal order item revenue accounting items are created. Although in this case the revenue accounting items do not contain a value for the migration package. The event can also be used if you want to inform other components or processes once order item revenue accounting items are created by sender component CA as part of the migration.

2. Create follow-on document item
   After the migration package has been created in the previous step, you can continue to create the follow-on document items. The follow-on document items are order item revenue accounting items for one-off charges, fulfillment item revenue accounting items and invoice item revenue accounting items. You can choose whether legacy data will be created by marking the appropriate checkbox. If legacy data shall be created but no invoices exist for a provider contract item from which the legacy data can be derived, a dummy legacy data entry will be created when the revenue accounting items are transferred to Revenue Accounting using transaction `FP_RAI_TRANSF`.

You can see operational load revenue accounting items that have been created by transaction `FP_RAI_OL` in the revenue accounting item monitor with transaction `FP_RAI_MON`.

With transaction `FP_RAI_TRANSF`, you transfer the operational load as well as normal revenue accounting items to Revenue Accounting. You can only transfer operational load revenue accounting items to Revenue Accounting if you have successfully executed all the steps of the operational load (“create migration package” and “create follow-on document item”).

Testing

As already described in the *Testing* chapter, you should thoroughly test the operational load in Hybris Billing.

After a cleanup in Revenue Accounting, you can use transaction `FP_RAI_OL` (Reset Transfer Date mode) to reset the transfer date of the operational load revenue accounting items in Convergent Invoicing.

After you have reset the transfer date, it is possible to transfer the revenue accounting items to Revenue Accounting again using transaction `FP_RAI_TRANSF`.

13.2.4 Hybris Billing with Sales and Distribution

Use

In a Hybris Billing with Sales and Distribution (SD) scenario:

- Order, fulfillment and invoice items for the service are created in Hybris Billing.
- Order, fulfillment and invoice items for the hardware sale are created in SD.

Service and hardware belong to the same revenue accounting contract in Revenue Accounting.

It may also be the case that only orders and fulfillments for the hardware sale that belong to one revenue accounting contract in Revenue Accounting originate from SD but the invoicing takes place in Hybris Billing, namely via SAP Convergent Invoicing.

The following sections describe aspects that are specific to the mixed “Hybris Billing and Sales and Distribution” scenario. See the chapters regarding the scenario “Hybris Billing” and “Sales and Distribution” for information regarding the standalone scenarios which is also true for the mixed scenario described here.

> **Note**
>
> Only packaged migration is supported for scenarios including Hybris Billing. As a prerequisite, the company code and accounting principle combination, without a migration package, must be productive, and the transfer date of the migration packages must be the same, or later than, the transfer date of the company code and accounting principle combination that is already productive.

Prerequisites

Perform all of the necessary steps listed in the prerequisites section of the standalone scenarios “Hybris Billing” and “Sales and Distribution”.

Activities

Operational Load

Before you can start the operational load in Convergent Invoicing and SD respectively, you must enrich provider contracts in Convergent Invoicing and sales documents in SD with information relevant for revenue accounting, such as reference type and ID from SAP Customer Relationship Management (CRM). There are two reports in SAP CRM for this purpose:

1. Report `CRM_ISX_REVACC_MIG_ENRICH_CRM2`
   This report enriches the existing provider sales orders and provider contracts in SAP CRM. It also determines the relevant enrichment data for provider contracts in Convergent Invoicing. This data is written to an enrichment database that will be considered in the following report.
2. Report `CRM_ISX_REVACC_MIG_ENRICH_FICA`
   This report needs to be executed for the following two modes:
   - FI-CA: It enriches the provider contracts in Convergent Invoicing with the data from the previously populated enrichment database.
   - SD: It enriches the sales orders in SD with the data from the previously populated enrichment database.

Execute the operational load for Hybris Billing and SD as outlined in the specific chapters.

When hardware from SD is invoiced in Convergent Invoicing, the SD operational load will create trigger records in Convergent Invoicing. These triggers are then processed with transaction `FP_RAI_OL` usign the*Loading of SD Orders* mode.

Testing

As already described in the *Testing Migration* chapter, you should thoroughly test the operational load in Hybris Billing, as well as SD.

Please refer to the testing section of the “Hybris Billing” and “Sales and Distribution” scenarios for specific details.

13.2.5 Third Party Sender

With Revenue Accounting, it is also possible to connect third party or custom-specific operational applications with custom-specific revenue accounting item (RAI) classes. You can generate interfaces and remote function call (RFC) function modules to process your specific order item, fulfillment item, and invoice item revenue accounting items. For more details, see SAP note 2196907.

If Revenue Accounting is used with a different or a third-party operational system, you need to implement a dedicated operational load which creates revenue accounting items that are similar to what has been described in the previous chapters.

To transfer data from a legacy revenue recognition system, you have to develop a custom-specific program to create legacy data.

13.3 Migration for Integration with Cost Object Controlling

Use

The migration for Integration with Cost Object Controlling follows a modified logic for controlling objects and related sales order items if results analysis forwards a percentage of completion to revenue accounting. This logic acts like a new valuation method in results analysis where the historic values (in table COSP) need to be adapted, as if the logic were in place from the beginning. Otherwise the historic values are incorrect.

This is achieved through the following activities:

Prerequisites

See Prerequisites under the General Description of Integration with Cost Object Controlling.

Activities

- The migration period must be set to **in closing** so that further reconciliation keys can be created and, at the same time, to prevent (manual) contract changes ending up in the migration period
- Perform the initial load for sales order items which relate to results analysis keys that are relevant for revenue accounting
- Run the results analysis during the migration period to transfer a percentage of completion to revenue accounting. During the migration period, the status must be set to **in closing** and postings need to go to a separate reconciliation key
- Calculate the contract assets/contract liability in revenue accounting and perform a posting run.

> **Note**
>
> Results analysis must not be executed until the initial load has been completed for all sales order items.

14 Archiving

You can remove data that you no longer require operatively from the database and store it in archive files. The data archiving concept is based on the Archive Development Kit (ADK).

The following provides information on the archiving objects provided by SAP.

For more information, see the documentation on data archiving in the SAP NetWeaver Library (on the SAP Help Portal at http://help.sap.com/nw *SAP NetWeaver Platform* > *Application Help* > *Function-Oriented View* > *Solution Life Cycle Management* >).

14.1 Archiving of Revenue Accounting Contracts (FARR_CONTR)

Use

To reduce the load on your database, you can archive revenue accounting contracts that are no longer needed. Archiving of revenue accounting contracts takes place using the archiving object `FARR_CONTR`.

Features

Tables

The archiving object `FARR_CONTR` archives data from the following tables:

Table Reference

Table 131:

Structure	Structure Name
`FARR_D_CONTRACT`	Contracts (headers)
`FARR_D_CONT_ERR`	Log messages for contract errors
`FARR_D_DEFITEM`	Accrual items
`FARR_D_EV_CONTR`	Events that arose for contracts
`FARR_D_FULFILLMT`	Fulfillment entries

FARR_D_POB_HIS	Histories for changes to performance obligations/contract structures
FARR_D_POB	Performance obligations
FARR_D_POSTING	Postings
FARR_D_RECON_KEY	Reconciliation keys
FARR_D_DEFERRAL	Accruals
FARR_D_INVOICE	Invoice entries
FARR_D_MANL_CHNG	Manual Changes

You can display a list of the generated database tables that the archiving object FARR_CONTR accesses. To do so, in archive administration, choose the *Database Tables* pushbutton. From these generated tables, you can write data to archive files and, in the deletion phase, you can remove this data from the database. Subsequently, the entries in the tables can also be restored.

Data Object

The data object contains all important data for a contract. The system writes the data objects sequentially to an archive file. They all have the same structure in accordance with the description in the archiving object.

Programs

The archiving object FARR_CONTR uses the following programs:

Table 132:

Program	Function
RFARR_CONTR_AR01	Archiving program:
RFARR_CONTR_AR02	Deletion program
RFARR_CONTR_AR03	Reload program

For the deletion program, SAP provides the standard variants SAP&PROD (update mode) and SAP&TEST (test mode).

Call

You archive (and also delete) using the SAP standard tool for archiving, the Archive Development Kit. Call Archive Administration (transaction SARA on the SAP Easy Access screen under *Tools* > *Administration* > *Administration* > *Data Archiving*) and enter archiving object FARR_CONTR.

Note for Integration with SAP NetWeaver Information Lifecycle Management

The current archiving object is integrated with SAP NetWeaver ILM.

If you have configured SAP NetWeaver ILM and this archiving object accordingly, the write program that generates the archive files displays the *ILM Actions* group box. In this group box, you can choose one of the following radio buttons:

- Archiving
- Data Destruction

For more information, see the documentation for these radio buttons in the system and in the application help for SAP NetWeaver ILM.

14.1.1 Checks (FARR_CONTR)

You can archive a revenue accounting contract if the following applies for the revenue accounting contracts to be archived:

- They have the contract status *Concluded* (signed).
- The date on which they were signed is entered.
- They are updated.

14.1.2 Application-Specific Customizing (FARR_CONTR)

You define the residence time for revenue accounting contracts and activate the Archive Info Structure in Customizing for Revenue Accounting under *Revenue Accounting* > *Revenue Accounting Contracts* > *Archiving*.

> **Note**
>
> You are allowed to archive revenue accounting contracts only if the date, on which the contract was signed, is further in the past than the residence time.

14.1.3 Variant Settings for Archiving (FARR_CONTR)

Use

The variant contains the selection criteria for the revenue accounting contracts that you want to archive.

Activities

You schedule the write program as follows:

1. Enter an already existing variant or create a new variant.
2. Enter the start date and the spool parameters.
3. Restrict the selection of the revenue accounting contracts using the date on which the contract was signed and using additional selection criteria.
4. If you want the write program to only run a simulation for the revenue accounting contracts you selected, choose *Test Mode*.
   The system then reads the data, but does not create an archive file. The system issues a statistic about the number of data records read during the test run.
5. If you want the write program to create an archive file for the revenue accounting contracts you selected, choose *Production Mode*.

If you chose the option *Start Automatically* for the deletion program in Customizing for the archiving object `FARR_CONTR`, and you choose a productive variant for the archiving program, then the deletion program also starts with a productive variant following the archiving program. That means that after archiving, the system deletes the data from the database.

If you do not set the *Detailed Log* indicator, you receive only a summarized log of the processed objects without success messages.

If you set the *Detailed Log* indicator, the write program outputs a detailed log with success messages. The detailed log also contains, in addition to the information contained in the compact log, all processed objects including the messages belonging to them.

If you set the *Log Output* indicator, the system writes the log both in the spool list and in the application log.

In the comment for the archiving run, you can enter a text that describes the contents of the archive files of the archiving run.

14.1.4 Displaying Archived Revenue Accounting Contracts (FARR_CONTR)

Use

You can display archived table entries in the Archive Explorer in the Archive Information System (transaction `SARI`).

Prerequisites

- For the archiving object `FARR_CONTR` there is at least one information structure; you have created this information structure on the basis of the standard field catalog `SAP_FARR_CONTR` provided by SAP. SAP provides the archive information structure `SAP_FARR_CONTR` for field catalog `SAP_FARR_CONTR`.

- The information structure is activated and structured.
- The information structure contains the fields `CONTRACT_ID` (Contract) and `POB_ID` (Performance Obligation) as key fields.
- The information structure contains the fields `Company_Code` (Company Code) and `Accounting_principle` (Accounting Principle) as additional fields.

14.2 Archiving of Revenue Accounting Items (FARR_RAI)

Use

To reduce the load on your database, you can archive revenue accounting items that are no longer needed. Archiving of revenue accounting items takes place using the archiving object `FARR_RAI`.

> **Note**
>
> A revenue accounting item can have various statuses. The system manages the various statuses of revenue accounting items from a technical perspective by using different database tables. Archiving takes into account only those revenue accounting items with the status *Processed*.

You store revenue accounting items in various database tables. When a revenue accounting class is created, the system generates the tables for data storage of revenue accounting items separately for each class. In relation to the database tables used, the system also differentiates based on the following record types:

- Main Items
  These represent the actual accounting items.
- Condition Items
  These represent supplements to the main items.

The system stores the main items and condition items in separate database tables. Using the archiving object `FARR_RAI`, you archive processed revenue accounting items of revenue accounting class type 01 (order items), including the related processed revenue accounting items of revenue accounting class type 02 (fulfillment items) and revenue accounting class type 03 (invoice items), from all database tables used for data storage.

Structure

The archiving object has the following structure:

Table 133:

Structure	Structure Name
`FARR_S_RAI4_HEAD_ARCH`	Archiving structure for revenue accounting items (header)
`FARR_D_COMP`	Archiving structure for combined contract items
`FARR_D_RAI_CH`	Archiving structure for change items
`FARR_D_LEGACY`	Legacy data from the initial load for revenue accounting items

FARR_D_LEGACYC	Legacy data from the initial load for conditions for revenue accounting items
FARR_D_LEGACYSF	Legacy data for planned order fulfillment

Tables

You can display a list of the generated database tables that the archiving object FARR_RAI accesses. To do so, in archive administration, choose the *Database Tables* pushbutton. From these generated tables, you can write data to archive files and, in the deletion phase, you can remove this data from the database.

Data Object

The data object contains all processed items of revenue accounting class type 01 (order items), including the related processed revenue accounting items of revenue accounting class type 02 (fulfillment items) and revenue accounting class type 03 (invoice items), The system writes the data objects sequentially to an archive file. They all have the same structure in accordance with the description in the archiving object.

Programs

The archiving object FARR_RAI uses the following programs:

Table 134:

Program	Function
RFARR_RAI_AR01	Write program for archiving processed revenue accounting items
RFARR_RAI_AR02	Deletion program
RFARR_RAI_AR03	Read program

For the deletion program, SAP provides the standard variants SAP&PROD (update mode) and SAP&TEST (test mode).

Call

You archive (and also delete) using the SAP standard tool for archiving, the Archive Development Kit. Call Archive Administration (transaction SARA on the SAP Easy Access screen under *Tools* > *Administration* > *Administration* > *Data Archiving*) and enter archiving object FARR_RAI.

Note for Integration with SAP NetWeaver Information Lifecycle Management

The current archiving object is integrated with SAP NetWeaver ILM.

If you have configured SAP NetWeaver ILM and this archiving object accordingly, the write program that generates the archive files displays the *ILM Actions* group box. In this group box, you can choose one of the following radio buttons:

- Archiving
- Data Destruction

For more information, see the documentation for these radio buttons in the system and in the application help for SAP NetWeaver ILM.

14.2.1 Checks (FARR_RAI)

You can archive revenue accounting items, if the revenue accounting contract to which the revenue accounting item relates was deleted (see Archiving of Revenue Accounting Contracts (FARR_CONTR) [page 199]).

14.2.2 Application-Specific Customizing (FARR_RAI)

You activate the archive information structure in Customizing for Revenue Accounting under *Revenue Accounting* > *Inbound Processing* > *Archiving*.

14.2.3 Variant Settings for Archiving (FARR_RAI)

Use

The variant contains the selection criteria for the revenue accounting items that you want to archive.

Activities

To schedule the write program:

1. Enter an already existing variant or create a new variant.
2. Enter the start date and the spool parameters.
3. Enter the revenue accounting item class that contains the processed items you want to archive.
4. Restrict the selection of the revenue accounting items to be archived using the date of creation of the revenue accounting item they belong to.
5. If you want the write program to only run a simulation for the revenue accounting items you selected, choose *Test Mode*.
   The system then reads the data, but does not create an archive file. The system issues a statistic about the number of data records read during the test run.
6. If you want the write program to create an archive file for the revenue accounting items you selected, choose *Production Mode*.

If you chose the option *Start Automatically* for the deletion program in Customizing for the archiving object `FARR_RAI`, and you choose a productive variant for the archiving program, then the deletion program also starts with a productive variant following the archiving program. That means that after archiving, the system deletes the data from the database.

If you do not set the Detailed Log indicator,

you receive only a summarized log of the processed objects, without success messages. If you set the *Detailed Log* indicator, the write program outputs a detailed log with success messages. The detailed log also contains, in addition to the information contained in the compact log, all processed objects including the messages belonging to them.

If you set the *Log Output* indicator, the system writes the log both in the spool list and in the application log.

In the comment for the archiving run, you can enter a text that describes the contents of the archive files of the archiving run.

14.2.4 Displaying Archived Revenue Accounting Items (FARR_RAI)

Use

You can display archived table entries in the Archive Explorer in the Archive Information System (transaction `SARI`).

Prerequisites

- For the archiving object `FARR_RAI` there is at least one information structure; you have created this information structure on the basis of the standard field catalog `SAP_FARR_RAI` provided by SAP. SAP provides the archive information structure `SAP_FARR_RAI` for field catalog `SAP_FARR_RAI`.
- The information structure is activated and structured.
- The information structure contains the following fields as key fields:
  - `RAIC` (Revenue Accounting Item Class)
  - `SRCDOC_COMP` (Sender Component of Original Item)
  - `SRCDOC_LOGSYS` (Logical System of Original Item)
  - `SRCDOC_TYPE` (Type of Original Document Item)
  - `SRCDOC_ID` (ID of Original Item)
  - `BUKRS` (Company Code)

15 Extensibility

The *SAP Revenue Accounting and Reporting* solution can be enhanced in the following ways:

- Field Extensibility
  This solution provides an end-to-end field extensibility. You can route fields from operational documents (such as sales orders) through various components of this solution up to the final general ledger postings. This section describes the different types of field extensibility that are supported and the steps to implement them.
- Business Add-Ins
  This solution provides several Business Add-Ins (BAdI) that allow you to change the default behavior. This section describes the Business Add-Ins that are available.

15.1 Field Extensibility

SAP Revenue Accounting and Reporting provides an end-to-end (field) extensibility. End-to-end means that information entered in a sales order can be passed to *SAP Revenue Accounting and Reporting* and used there for several purposes. The field extensibility concept of *SAP Revenue Accounting and Reporting* assigns each customer field to one of the following categories, depending on where the field is actually needed in the solution:

- Fields that are only needed in revenue accounting item processing
  These are typically fields needed to define rules for contract combinations or contract composition in BRF+ (such as defining performance obligations and standalone selling prices) but do not need to be displayed in revenue accounting contracts. These fields only extend the Revenue Accounting Item tables.
- Fields that are also needed in revenue accounting contracts (on performance obligation level)
  These fields can be added to the contract user interface and are available to various Business Add-Ins (such as the BAdI for price allocation). These fields extend Revenue Accounting Item tables as well as the performance obligation table.
- Fields that are also needed for reporting purposes
  These fields extend the Revenue Accounting Item tables, the performance obligation table, and the Revenue Accounting postings table. These fields can also be passed to general ledger documents.
- Fields on contract (header) level
  These fields can be derived in BRF+ and be displayed in the contract user interface. They can also be made available in several Revenue Accounting applications such as Contract Search, Time-Based Revenue Calculation, and Revenue Posting Run.

The extensibility concept of *SAP Revenue Accounting and Reporting* is based on the extensibility concept of the SAP Easy Enhancement Workbench (EEW), which uses so-called extension include structures to provide field extensibility. These include structures are included in all relevant tables and internal structures. Therefore, a field added to one of the structures is automatically made available in all relevant components. Customer fields are added by creating append structures to the extension includes.

Depending on the categories mentioned above, each field needs to be added to one of following extension include structures:

- `INCL_EEW_FARR_ARL` for fields only used in revenue accounting item processing
- `INCL_EEW_FARR_POB` for fields also used in revenue accounting contracts
- `INCL_EEW_FARR_REP` for fields also used in reporting
- `INCL_EEW_FARR_CONTRACT` for fields on contract header level

The first three includes extend performance obligations. The fourth include extends revenue accounting contract headers. The three-tier design of the performance obligation extension helps you minimize data volume, to avoid information redundancy, and improve performance and memory consumption. Therefore, you must consider which fields are needed for a specific purpose:

Fields in the `INCL_EEW_FARR_ARL` include are available in BRF+ rules after configured as custom-specific fields in the RAI configuration (see Field Extensibility in Revenue Accounting Item Processing [page 209] for more details). They are not available for display in the Performance Obligation UI or available for reporting.

Fields in the `INCL_EEW_FARR_POB` include are available in BRF+ rules and also extend the Performance Obligation table (`FARR_D_POB`). Therefore, these fields can be displayed and changed when necessary in the Performance Obligation user interface. However, they are not available for reporting. For more information about how to extend the Contract and Performance Obligation UI, see Field Extensibility for Revenue Accounting Contracts [page 210].

Fields in the `INCL_EEW_FARR_REP` include are available in BRF+ rules, in performance obligations, and in all Revenue Accounting postings (table `FARR_D_POSTING`). These fields are available in Revenue Accounting data sources and can be passed to FI-GL and CO (see Field Extensibility for Revenue Reporting [page 212]for more details).

Fields in the `INCL_EEW_FARR_CONTRACT` include can be displayed in the contract (header) user interface and are available in various reports as selection criteria. These fields have to be derived in BRF+ depending on the line item information (see the Add Contract Fields to Selection Criteria section for more details).

Though it would be safe to add all item fields to `INCL_EEW_FARR_REP` (because then they were available all over the solution), it is recommended to really think about where the fields are needed and where not – because for example the posting table will become very big and unnecessary fields will have a negative effect with regards to performance and memory consumption.

If a field is assigned to the wrong include, you can move it to another include. However, to avoid database conversions, you must make the move operation only in one direction. Specifically, none of the tables should have less fields after the move. For example, it is possible to delete a field from `INCL_EEW_FARR_ARL` and add it to `INCL_EEW_FARR_POB`.

> **Note**
>
> Make sure that the fields stored in the above extension includes are not more than 50.

15.1.1 Field Extensibility in Revenue Accounting Item Processing

You can add customer fields to revenue accounting items. If you enhance revenue accounting items, the interface for creating revenue accounting items is enhanced. In addition, the database tables that store revenue accounting items are enhanced.

To do so, you first have to add the customer fields to the `INCL_EEW_FARR_ARL`, `INCL_EEW_FARR_POB` or `INCL_EEW_FARR_REP` extension include). After the fields are added, they are available for Revenue Accounting Item class configuration. The fields should only be added to order item classes, as they are currently not supported for other class types. (You can add them to classes of other class types anyway. However, they are neither filled nor evaluated in Revenue Accounting.

By using the Configuration of Revenue Accounting Item classes (transaction `FARR_RAI_CONF`), you can add and activate the customer specific fields for status raw and/or status processable and processed. Always select both statuses, to make the fields available in the following components (BRF+, performance obligations, and so on)

1. Select the Revenue Accounting Item class to which you want to add the fields.
2. Choose *Customer Fields* and select the fields that you want to add.
3. Mark them for use for items in status raw or items in status processable or processed.
4. Save and activate your changes.
5. Generate the Revenue Accounting Item class by using transaction `FARR_RAI_GEN` or by using the menu option *Environment* > *Generation*.

After you have completed this procedure, the custom fields are part of all internally used structures and the database tables that store revenue accounting items. The fields may be displayed in the monitor for revenue accounting items. In the layout of the list, add the custom fields to the list of displayed fields in the respective layout.

15.1.1.1 Field Extensibility for Rules (BRF+)

After customer fields are configured for the order item RAI class, such as RAI class SD01 for SD, they are also available in BRF+. All functions, such as Process POB, provide a structure parameter, such as `IS_SD01_BRF` for the SD Application Template. The structure is bound to a DDIC structure that already contains the customer fields. To make the fields available in the BRF+ structure, you must update its DDIC binding. To do this, maintain your application that was copied from the template delivered by SAP (for example, template `FARR_AP_SD_PROCESS_TEMPLATE` for the SD-specific application) and select one of the functions (for example, `FC_PROCESS_POB`). On the Signature tab, select the input structure (for example, `IS_SD01_BRF`), choose Edit and then choose Refresh Binding. The structure now contains the configured customer fields, which can be used in the assigned rules and decision tables.

With function Process Header (`FC_PROCESS_HEADER`), you can derive fields appended to the `INCL_EEW_FARR_CONTRACT` include. These fields are then available on contract header level. To do this, update the binding of BRF+ structure `ES_HEADER` (can be found as the result structure of function `FC_PROCESS_HEADER`).

15.1.2 Field Extensibility for Revenue Accounting Contracts

For Revenue Accounting Contracts, both contract and performance obligation can have customer fields.

- For fields on contract level, add the customer fields to the`INCL_EEW_FARR_CONTRACT` include.
- For fields on performance obligation level, add the customer fields to the `INCL_EEW_FARR_POB` or `INCL_EEW_FARR_REP` include.

You can add customer fields to the user interface using the following mechanism:

- Application Customizing
  Application customizing is client-specific. You can transport the customizing to target systems like normal IMG customizing. It is simpler than Application Configuration.
- Application Configuration
  Application Configuration is cross-client. You can also transport the configuration. It involves more steps.

For more information, see the following help documentation:

https://help.sap.com/saphelp_nw73ehp1/helpdata/en/b1/74386acf234d539b4022e23822025f/frameset.htm

You can find all customizing and configuration by using the Web Dynpro application `WD_ANALYZE_CONFIG_USER`.

15.1.2.1 Add Customer Fields to the Contract and Performance Obligation UI by using Customizing

In Revenue Accounting, the following Web Dynpro applications or application configurations can be customized to add customer fields on the UI:

- Account Determination (`FARR_ACCT_DETERMINATION_OVP/ FARR_ACCT_DETERMINATION_OVP`)
- Add Contracts to Review List (`FARR_ADD_CONT_TO_REVIEW_LIST/ FARR_ADD_CONT_TO_REVIEW_LIST`)
- Price Allocation (`FARR_ALLOC_PRICE_OVP/FARR_ALLOC_PRICE_OVP`)
- Resolve Change Conflicts (`FARR_CONFLICT_OVP/FARR_CONFLICT_OVP_AC`)
- Contract Comprehensive View (`FARR_CONTRACT_ALL_OVP/FARR_CONTRACT_ALL_OVP`)
- Manual Fulfillments (`FARR_CONTRACT_MAN_FULFILL_OVP/ FARR_CONTRACT_MAN_FULFILL_OVP`)
- Contract Standard View (`FARR_CONTRACT_MGMT_OVP/FARR_CONTRACT_MGMT_OVP`)
- Contract Search (`FARR_CONTRACT_SEARCH_OVP/ FARR_CONTRACT_SEARCH_OVP`)
- Contract Combination (`FARR_MANUAL_COMBINE_OVP/ FARR_MANUAL_CONTRACT_COMBINE_OVP`)
- Performance Obligation Detail (`FARR_POB_DETAIL_OVP/FARR_POB_DETAIL_OVP`)
- Performance Obligation Overview (`FARR_POB_MGMT_OVP/FARR_POB_MGMT_OVP`)
- Add Manual Performance Obligation (`FARR_POB_MGMT_OVP/FARR_POB_MGMT_OVP`, WebDynpro component configuration `FARR_POB_MGMT_DETAIL_EDIT_CC`)
- Revenue Schedule (`FARR_POB_REV_RECOG_OVP/FARR_POB_REV_RECOG_OVP`)
- Change Revenue Schedule (`FARR_SPREADING_CHANGE_OVP/ FARR_SPREADING_CHANGE_OVP`)
- Revenue Posting and Simulation (`FARR_ACCR_RUN/FARR_ACCR_RUN_AP`)
- Shift Contracts to next period (`FARR_CONTRACT_SHIFT/FARR_CONTRACT_SHIFT_AP`)
- Job Monitor (`FARR_JOB_MONITOR/ FARR_JOB_MONITOR`)

- Contract Liability Posting (`FARR_LIAB_RUN/FARR_LIAB_RUN_AP`)
- Revenue Transfer to GL/CO Schedule (`FARR_PERIODIC_RUN/FARR_PERIODIC_RUN`)
- Reconciliation for G/L Accounts Between RA and GL (`FARR_RECON_ACCOUNT_RA_GL/ FARR_RECON_ACCOUNT_RA_GL_AP`)
- Reconciliation Contracts/FI Documents (`FARR_RECON_FI_USER/ FARR_RECON_FI_USER_CON`)
- Reconciliation RA Postings and GL Totals (`FARR_RECON_POSTING_GL/FARR_RECON_POSTING_GL_CC`)
- Revenue Posting Reversal (`FARR_RECON_KEY_STATUS/FARR_RECON_KEY_STATUS`)
- Contract Shift History (`FARR_SHIFT_HISTORY_AUDIT/FARR_SHIFT_HISTORY_AUDIT_AC`)
- Time-based Revenue Calculation (`FARR_TM_REV_RUN/FARR_TM_REV_RUN_AP`)
- Disaggregation of Revenue by Customer (`FARR_DISAGGR_REVENUE_CUSTOMER/ FARR_DISAGGR_REVENUE_CUSTOMER`)
- Disaggregation of Revenue by Customer Group (`FARR_DISAGGR_REVENUE_CUST_GRP/ FARR_DISAGGR_REVENUE_CUST_GRP`)
- Disaggregation of Revenue by POB type (`FARR_DISAGGR_REVENUE_POB_TYPE/ FARR_DISAGGR_REVENUE_POB_TYPE`)
- Posted Amount by Contract (`FARR_POSTED_AMOUNT_CONTRACT/ FARR_POSTED_AMOUNT_CONTRACT_CC`)
- Posted Amount by POB type (`FARR_POSTED_AMOUNT_POB_TYPE/ FARR_POSTED_AMOUNT_POB_TYPE_CC`)

You can find all relevant application configurations in the package `FARR_CONTRACT_UI` and `FARR_ANALYTICS`, in the following folders:

- *Web Dynpro* > *Web Dynpro Applicat.* (up to SAP SAP NetWeaver 7.3)
- *Web Dynpro* > *FPM Application* (SAP NetWeaver 7.4 or higher)

To customize a Web Dynpro application, perform the following steps:

1. Start transaction SE80.
2. Choose *Workbench* > *Edit Object* (Shift-F5)
3. For a system based on SAP NetWeaver 7.4 or higher, choose *Enhanced Options* first
4. On the Web Objects tab, enter the Web Dynro Application Configuration of one of the applications mentioned above into the Application Configuration field.
5. From the menu, choose *Web Dynpro Configuration* > *Test* > *Execute in Administration Mode*
6. Click *Adapt Configuration* in the upper-right corner.
7. An error message appears that reads “The specified configuration does not yet exist”. Choose *Create* to continue to create the Component customizing
8. Enter a *Description* for the customizing on the dialog box that appears.
9. Specify a customizing request if needed from the *Select Transport Request* dialog box.
10. Now you can repeat the same procedure recursively to customize the current configuration and the configurations of the contained child components.

15.1.2.2 Add Contract Fields to Selection Criteria

In the following applications and application configurations, custom-specific information on contract header level can be used for the selection of contracts to be processed:

- Contract Search UI (`FARR_CONTRACT_SEARCH_OVP/FARR_CONTRACT_SEARCH_OVP`)

- Revenue Posting and Simulation (FARR_ACCR_RUN/FARR_ACCR_RUN_AP)
- Revenue Transfer to GL/CO Schedule (FARR_PERIODIC_RUN/FARR_PERIODIC_RUN)
- Time-Based Revenue Posting (FARR_TM_REV_RUN/FARR_TM_REV_RUN_AP)
- Contract Liability Posting (FARR_LIAB_RUN/FARR_LIAB_RUN_AP)
- Shift Contracts to Next period (FARR_CONTRACT_SHIFT/FARR_CONTRACT_SHIFT_AP)

To make the custom specific fields available for selection, perform the following steps:

1. Customize the component of the selection component (as described earlier in this document) or create a new Web Dynpro application configuration and assign it to a custom-specific role.
2. Change the configuration of the *FPM_SEARCH_UIBB* component.
3. Choose Edit Search Attributes. The custom-specific fields are available in the Available Search Criteria section in the dialog box.
4. From the Available Search Criteria list on the left side, choose the customer fields that you want to add, and then choose Add Search Criteria to add them to the Selected Search Criteria on the right side.
5. The customer fields are available for selection.

15.1.2.3 Customer Field Validation

Customer fields that can be changed by the user must be validated. You can validate customer fields by using enhancement spot FARR_POB_CUST_VALIDATION, Business Add-In FARR_BADI_POB_CUST_VALIDATION, and method POB_VALIDATION.

The importing parameter IS_POB_DATA_BUFFER contains all fields of one performance obligation (not only the customer fields). You can write code to validate any field on performance obligations by using this BAdI.

The importing parameter IO_MSG_HANDLER is an instance of a message handler. You can add your validation result as standard ABAP messages to the message handler. To understand adding messages to the message handler, you can refer to method CL_FARR_CONTRACT_CHECKER ->CHECK_POB_COMPANY_CODE.

15.1.3 Field Extensibility for Revenue Reporting

Fields needed for reporting must be added to structure INCL_EEW_FARR_REP. This include also extends the Revenue Accounting Posting table (FARR_D_POSTING).

15.1.3.1 Passing Information to General Ledger Documents

To include customer fields in the general ledger documents that are created by Revenue Accounting and Reporting, you must extend the Revenue Accounting and Reporting (INCL_EEW_FARR_REP) and General Ledger

(CI_COBL) structures with the same set of fields (the field names must be the same). To extend the general ledger document and ledgers, define customer fields in the following Customizing activity:

Financial Accounting (New) > *Financial Accounting Global Settings (New)* > *Ledgers* > *Fields* > *Customer Fields*. All fields that are included in both CI_COBL and INCL_EEW_FARR_REP are automatically transferred into general ledger documents.

To change standard general ledger document fields (fields that are not in the CI_COBL structure), you must complete the following tasks:

1. Enhance structure INCL_EEW_FARR_POSTING.
2. Implement BAdI FARR_POSTING_ENHANCEMENT in Enhancement Spot FARR_ES_POSTING.

The BAdI FARR_POSTING_ENHANCEMENT provides a method PROCESS_CUST_FIELDS. You can use this method to set non-customer fields in general ledger documents.

> **Caution**
>
> Be careful when you change standard fields. Changing standard fields may cause incorrect general ledger documents. You may make these changes at your own risk.

Method PROCESS_CUST_FIELDS has two parameters:

- IS_RR_LINE_ITEM contains all information for a Revenue Accounting posting item (including customer fields defined in INCL_EEW_FARR_REP)
- CS_ACC_IT contains all fields of the corresponding general ledger document item.

15.1.3.2 Activate Enhanced Fields in Datasources

The datasource 0FARR_RA_10, which is based on the Revenue Accounting posting data (table FARR_D_POSTING), automatically includes all fields defined in the INCL_EEW_FARR_REP structure. Therefore, the datasource automatically fetches the fields that you have appended to this structure. Check the availability and visibility of your fields by using transaction RSA6. After running the transaction, select node 0FARR / Financial Accounting Revenue Recognition in the hierarchy. The datasource 0FARR_POB_ATTR, which is based on performance obligation data, automatically includes all fields defined in the INCL_EEW_FARR_POB structure. Therefore, the datasource automatically fetches the fields that you have appended to this structure. Check the availability and visibility of your fields by using transaction RSA6.

After you have made these changes, the enhanced fields in the datasources become visible to BW objects, such as Infoproviders and online data providers (ODP). For the data extraction to work, you must refresh the corresponding BI modeling.

15.2 Business Add-Ins

15.2.1 Validation of Status Change

With Enhancement Spot ES_FARR_FOUNDATION, BAdI FARR_ACPR_BUKR_CHECKS you can define custom-specific checks to validate the status switch for a company code / accounting principle combination. The BAdI has only one method, CHECK, with parameters IT_ACPR_BUKRS_OLD and IT_ACPR_BUKRS_NEW which denote the old and new status and transfer date for the selected company codes and accounting principles. Parameter CS_ERROR_MESSAGE is used to pass error messages that should prevent the status switch. See the documentation of BAdI FARR_ACPR_BUKR_CHECKS.

15.2.2 Enhance Revenue Accounting Items (Raw Items)

By using enhancement spot FARR_ARL and BAdI FARR_BADI_RAI0, you can fill additional attributes of Revenue Accounting Items with status raw (RAI0) depending on the Revenue Accounting Item class. You can also introduce additional checks that you want to perform before the raw items are saved to the database.

The IF_FARR_BADI_RAI0 interface for this BAdI is used for Business Add-In (BAdI) implementation FARR_BADI_RAI0 of enhancement spot FARR_ARL. It provides two methods:

- ENRICH
  This method is executed before the enrichment functionality that SAP delivers for each interface component is executed.
  You can implement checks for the Revenue Accounting Items per Revenue Accounting Item class in this method. It contains the following parameters:

  Table 135:

Parameter	Type	Data Type	Description
IV_RAIC	Importing	Type FARR_RAIC	Revenue Accounting Item Class
CT_RAI0_MI	Changing	Type FARR_TT_RAI0_MI_ALL	Table Type for FARR_S_RAI0_MI_ALL
CT_RAI0_CO	Changing	Type FARR_TT_RAI0_CO_ALL	Table Type for FARR_S_RAI0_CO_ALL
CT_MESSAGES	Changing	Type FARR_TT_RAI_MSG	Table Type for FARR_S_RAI_MSG

- CHECK_BEFORE_SAVE

This method is executed before raw Revenue Accounting Items (RAI0) are saved to the database. It contains the following parameters:

Table 136:

Parameter	Type	Data Type	Description
IV_RAIC	Importing	Type FARR_RAIC	Revenue Accounting Item Class
IT_RAI0_MI	Importing	Type FARR_TT_RAI0_MI_ALL	Table Type for FARR_S_RAI0_MI_ALL
IT_RAI0_CO	Importing	Type FARR_TT_RAI0_CO_ALL	Table Type for FARR_S_RAI0_CO_ALL
CT_MESSAGES	Changing	Type FARR_TT_RAI_MSG	Table Type forFARR_S_RAI_MSG

> **Note**
>
> In case of errors, the changing parameter CT_MESSAGES has to be filled. The message structure contains attributes for the error message, as well as the key fields for the Revenue Accounting Item. It is crucial for the correct processing of the erroneous Revenue Accounting Items that these key fields are filled in the message structure.

Important: This BAdI is intended for custom Revenue Accounting Item classes only. The enrichment and checks of raw revenue accounting data that are delivered by SAP are implemented in class CL_FARR_RAI_IFCOMP.
For more information, see the documentation of BAdI FARR_BADI_RAI0.

15.2.3 Enhance Revenue Accounting Items (Processable Items)

By using enhancement spot FARR_ARL and BAdI FARR_BADI_RAI2, you can fill additional attributes of Revenue Accounting Items with status raw (RAI2) depending on the Revenue Accounting Item class. You can also introduce additional checks you want to perform before the raw items are saved to the database.

The IF_FARR_BADI_RAI2interface for this BAdI is used for Business Add-In (BAdI) implementation FARR_BADI_RAI2 of enhancement spot FARR_ARL. It provides two methods:

- ENRICH
  This method is executed before the enrichment functionality that SAP delivers for each interface component is executed.

You can implement checks for the Revenue Accounting Items per Revenue Accounting Item class in this method. It contains the following parameters:

Table 137:

Parameter	Type	Data Type	Description
IV_RAIC	Importing	Type FARR_RAIC	Revenue Accounting Item Class
CT_RAI2_MI	Changing	Type FARR_TT_RAI2_MI_ALL	Table Type for FARR_S_RAI2_MI_ALL
CT_RAI2_CO	Changing	Type FARR_TT_RAI2_CO_ALL	Table Type for FARR_S_RAI2_CO_ALL
CT_MESSAGES	Changing	Type FARR_TT_RAI_MSG	Table Type for FARR_S_RAI_MSG

- CHECK_BEFORE_SAVE
  This method is executed before processable Revenue Accounting Items (RAI2) are saved to the database. It contains the following parameters:

  Table 138:

Parameter	Type	Data Type	Description
IV_RAIC	Importing	Type FARR_RAIC	Revenue Accounting Item Class
IT_RAI2_MI	Importing	Type FARR_TT_RAI2_MI_ALL	Table Type for FARR_S_RAI2_MI_ALL
IT_RAI2_CO	Importing	Type FARR_TT_RAI2_CO_ALL	Table Type for FARR_S_RAI2_CO_ALL
CT_MESSAGES	Changing	Type FARR_TT_RAI_MSG	Table Type for FARR_S_RAI_MSG

> **Note**
>
> In case of errors, the changing parameter CT_MESSAGES has to be filled. The message structure contains attributes for the error message, as well as the key fields for the Revenue Accounting Item. It is crucial for the correct processing of the erroneous Revenue Accounting Items that these key fields are filled in the message structure.

For more information, see the documentation of BAdI FARR_BADI_RAI2.

15.2.4 Combination of Contracts

By using enhancement spot FARR_ARL and BAdI FARR_BADI_CONTRACT_COMBINATION, you can determine how Revenue Accounting Items are grouped into revenue accounting contracts. For all Revenue Accounting Items that belong to the same contract, the same contract ID needs to be set.

This BAdI is executed during processing of Revenue Accounting Items. It is only called for order item RAIs and only as long as no performance obligation exists in the RA-engine that represents this order item.

The IF_FARR_RAI2_CONTR_COMB interface for this BAdI is used for Business Add-In (BAdI) implementation FARR_BADI_CONTRACT_COMBINATION of enhancement spot FARR_ARL. It provides the method COMBINE_CONTRACT.

This method is executed before Revenue Accounting Items of the order item type are processed. By default the example class implementation combines the contract by reference ID and reference type fields.

You can implement your own combination logic in this method.

The method contains the following parameters:

Table 139:

Parameter	Type	DataType	Description
IT_RAW_POB	Importing	Type FARR_TT_RAW_POB	Raw Data for Performance Obligation Creation
ET_COMBINED_CONTRACTS	Exporting	Type FARR_TT_CONTR_MAPPING	Table of Mapping entries of contract combination

In case of errors, the exception CX_FARR_MESSAGE has to be raised.

For more information, see the documentation of BAdI FARR_BADI_CONTRACT_COMBINATION.

15.2.5 Price Allocation

SAP Revenue Accounting and Reporting provides two BAdIs for processing price allocation.

Enhancement spot FARR_ALLOCATION_ENGINE and BAdI FARR_BADI_ALLOCATION_ENGINE are defined to perform price allocation. The interface method IF_FARR_ALLOCATION_ENGINE~PROCESS_ALLOCATION has importing parameter IT_POB_DATA, which contains all performance obligation information (including the customer fields). You can write your own BAdI implementation to perform price allocation based on any information available in the performance obligations. The standard SAP implementation for price allocation is implemented in class CL_FARR_ALLOCATION_ENGINE. For more information about the method PROCESS_ALLOCATION, see the BAdI documentation ofFARR_BADI_ALLOCATION_ENGINE.

Enhancement spot FARR_ALLOCATION_METHOD and BAdI FARR_BADI_ALLOCATION_METHOD allow you to define your own processes and calculations of price allocation at the level of a group (sub-structure) of performance obligations. Interface method IF_FARR_ALLOCATION_METHOD~ALLOCATE_COND_TYPES is used to allocate condition types from nodes to subnodes. The implementation determines how an amount on a node is allocated to its subnodes, and the process is repeated for each node of the tree. For more information about method ALLOCATE_COND_TYPES and its parameters, see the BAdI documentation.

The BAdI FARR_BADI_ALLOCATION_METHOD is called in the standard implementation of BAdI FARR_ALLOCATION_ENGINE. You can also use it in your own implementation of this BAdI to allocate amounts down the hierarchy.

See the BAdI documentation FARR_BADI_ALLOCATION_METHOD.

15.2.6 Deferral Method

By using enhancement spot FARR_DEFERRAL_METHOD and BAdI FARR_BADI_DEFERRAL_METHOD, you can define your own spreading of revenue for time-based performance obligations. The BAdI provides method GENERATE_FULFILL_ENTRY to allocate the amount provided in parameter IS_DEFERRAL_METHOD to the periods in the duration. You must provide a value for each period of the contract lifecycle (the time between START_DATE and END_DATE.

For more information about how to implement the BAdI, see the BAdI documentation and example implementations, such as FARR_DEFERRAL_METHOD_S.

> **Note**
>
> - If performance obligation with period-related deferral method is defined, the duration must not be less than one period.
> - If performance obligation with date-related deferral method is defined, the duration must be greater than one day.

15.2.7 Account Assignment Derivation

By using enhancement spot FARR_DERIVE_ACCT_ASSIGNMT and BAdI FARR_BADI_ACCT_ASSIGNMT you derive account assignments for manually created performance obligations. The BAdI provides two methods:

- DERIVE_DEFAULT_ACCT_ASSIGNMENT:
  This method is called when the system displays a dialog box for the user to create a new performance obligation. Here you can specify default account assignments based on other account assignments in the contract. Therefore, all contract data, including all performance obligations, is provided in this method.
- DERIVE_PAOBJNR:
  This method is called when the user changes attributes of the manually created performance obligation that might affect the Profitability Segment of the performance obligation. In that case, the method should return a new Profitability Segment from the relevant characteristics. Additionally, all contract information is passed into the method.

For more information, see the documentation of documentation of BAdI FARR_BADI_ACCT_ASSIGNMT.

15.2.8 Custom Validations

By using enhancement spot FARR_POB_CUST_VALIDATIONand BAdI FARR_POB_CUST_VALIDATION, you can add your own validations for performance obligations. The BAdI provides method POB_VALIDATION with the following parameters:

- IS_POB_DATA_BUFFER: the performance obligation to be checked
- IO_MSG_HANDLER: a reference to a message handler object

To understand adding messages to the message handler, you can refer to method *CL_FARR_CONTRACT_CHECKER* > *CHECK_POB_COMPANY_CODE*.

For more information, See the documentation of BAdI FARR_POB_CUST_VALIDATION.

15.2.9 Posting Enhancements

Enhancement spot FARR_POSTING_ENHANCEMENT contains BAdI FARR_POSTING_ENHANCEMENT and its method PROCESS_CUST_FIELDS. You can use this BAdI to set standard fields, such as material number and transaction type, from other fields available in *SAP Revenue Accounting and Reporting* or available in include INCL_EEW_FARR_REP.

Be careful when you change standard fields. Changing standard fields may cause incorrect general ledger documents. You may make these changes at your own risk.

Method PROCESS_CUST_FIELDS has two parameters:

- IS_RR_LINE_ITEM
  This parameter contains all information for a Revenue Accounting posting item (including customer fields defined in INCL_EEW_FARR_REP.
- CS_ACC_IT
  This parameter contains all fields of the corresponding general ledger document item.

For more information, See the documentation of BAdI FARR_POSTING_ENHANCEMENT.

15.2.10 Compound Fulfillments

By using enhancement spot FARR_COMPOUND_FULFILLMENT and BAdI FARR_BADI_COMPOUND_FULFILLMENT, you can create fulfillment entries for fulfillment events that occur on non-distinct performance obligations.

Fulfillment events that occur on non-distinct performance obligations can only be accounted for on their corresponding compound performance obligations. This BAdI lets you apply your own logic to assess the completion of the compound performance obligation when events occur on its non-distinct Performance Obligations. For example, when a fraction of a non-distinct performance obligation is fulfilled, you can determine how this "partial" fulfillment should progress the compound performance obligation toward its completion.

The BAdI provides method DERIVE_FULFILLMENT to create the fulfillment for the compound performance obligation. Input parameters include the triggering event on the non-distinct performance obligation, the

performance obligations of the contract, and the fulfillment history of the compound performance obligation. The method has to return the calculated fulfillment entries for the compound performance obligation.

For more information, see the BAdI documentation.

15.2.11 Review Worklist Enhancements

By using enhancement spot `FARR_BADI_SET_REVIEW_WORKLIST` and BAdI `FARR_BADI_SET_REVIEW_WORKLIST`, you can perform additional checks when the user chooses *Mark as Reviewed* on the Regular Monitoring Worklist. You can also use this BAdI to define additional selection criteria for the worklist. The BAdI provides the following methods:

- `SET_CUSTOMER_FIELDS`:
  This method is called when the user chooses *Mark as Reviewed* on the Regular Monitoring Worklist. You can add your own checks. The Input parameter is the ID of the corresponding performance obligation and output parameters include a table of messages and information about whether the review status has to be kept or can be changed to processable as requested by the user.
- `SET_CUSTOMER_SEL_CRITERIA`
  In this method, you can specify additional selection criteria for the Review Worklist.

15.2.12 Change Mode Determination of Performance Obligations

By using Enhancement Spot `FARR_CHANGE_MODE_DETERMINATION` and `BAdI FARR_CHANGE_MODE_DETERMINATION`, you can determine the change mode (Retrospective or Prospective) of specific performance obligations in one contract during contract modification.

The BAdI provides two methods:

- `DETERMINE_CHANGE_MODE`:
  This method determines the change mode (Retrospective or Prospective) for performance obligations that are included in the allocation of the transaction price (excluding performance obligations marked as “Exclude from Allocation” and lower-level performance obligations under such performance obligations) in the contract. It returns only one value for the Change Mode parameter for all involved performance obligations. In this way, the change mode can only be determined for the complete set of performance obligations, instead of for each individual performance obligation.
- `DETERMINE_CHANGE_MODE_EX_ALLOC`:
  This method determines the change mode for those performance obligations that are marked as Exclude from Allocation. It returns different change modes for individual performance obligations.

For more information, see the documentation of `BAdI FARR_CHANGE_MODE_DETERMINATION`.

15.2.13 RAI Reconciliation with non-SAP Sender Components

Transaction `FARR_CHECK_CONS` provides some functionality to reconcile RAIs between SAP Revenue Accounting and Reporting and sender systems. Native support is available only for SAP sender components, such as Sales

and Distribution (SD) and Contract Accounting (CA). Within the end-to-end extensibility of SAP Revenue Accounting and Reporting, you can use transaction FARR_CHECK_CONS to address reconciliation needs for non-SAP RAI sender components.

To integrate with a non-SAP RAI sender component, you can implement the two BAdIs of enhancement spot FARR_CHECK_ES. The implementation of the BAdIs enables a generic SAP framework to:

- Establish technical communications with a non-standard SAP sender component.
- Pull reconciliation relevant data from the sender component.
    - Phase 1: Request IDs of Revenue Accounting-relevant operational documents that meet certain selection criteria.
    - Phase 2: Reconciliation-relevant RAI attributes to a set of operational document IDs as a sender component supposedly has sent to SAP Revenue accounting and Reporting.

This section only addresses the part of BAdI implementation that resides in Revenue Accounting. Corresponding functionality must be available in the sender component in order to deliver the requested data. By using the BAdI implementations, you can control how communications from Revenue Accounting to the sender component are established. You can use RFC or any other protocol supported by SAP.

From the enhancement spot FARR_CHECK_ES, you must implement interface IF_FARR_CHECK_SELECTION (BAdI FARR_BADI_CHECK_SELECTION) for Phase 1 and IF_FARR_CHECK (BAdI FARR_BADI_CHECK) for Phase 2.

Method IF_FARR_CHECK_SELECTION~SELECT_DOCUMENTS is called during Phase 1 for the determination of the reconciliation pool (operational document IDs meeting the selection execution parameters of transaction FARR_CHECK_CONS). During Phase 2, only RAI attributes to these operational documents are accessed on both sides for detailed reconciliation. The implementation of the method must call function module FARR_CHECK_SET_OBJKEYS_STATUS or any wrapper of this method that is appropriate for the RAI sender platform (such as a Web service) to send back the results.

Method IF_FARR_CHECK~GET_DOCUMENT is called many times during Phase 2, always with a package of operational document IDs. From the document key information sent in parameter IT_CHECK_SIM determine all related documents (like orders, fulfillments, etc.) and provide the information in the corresponding change parameters.

The SAP sender components CA and SD rely on the same framework for RAI reconciliation between the Revenue Accounting and Sender Component. Therefore, it is recommended that you learn how transaction FARR_CHEC_CONS works for SAP sender components, including required technical configurations. However, note that the communications with a non-SAP system or via a non-SAP communication protocol require a different configuration that must be performed outside the SAP landscape. You may examine the SAP implementation of the above-mentioned BAdI methods to learn how to do the same for your own sender components.

For example, the BAdI implementations for the supported SAP sender components are FARR_RAI_CHECK_SD and FARR_BADI_CHECK_SELECTION_SD.

Important Disclaimers and Legal Information

Coding Samples

Any software coding and/or code lines / strings ("Code") included in this documentation are only examples and are not intended to be used in a productive system environment. The Code is only intended to better explain and visualize the syntax and phrasing rules of certain coding. SAP does not warrant the correctness and completeness of the Code given herein, and SAP shall not be liable for errors or damages caused by the usage of the Code, unless damages were caused by SAP intentionally or by SAP's gross negligence.

Accessibility

The information contained in the SAP documentation represents SAP's current view of accessibility criteria as of the date of publication; it is in no way intended to be a binding guideline on how to ensure accessibility of software products. SAP in particular disclaims any liability in relation to this document. This disclaimer, however, does not apply in cases of willful misconduct or gross negligence of SAP. Furthermore, this document does not result in any direct or indirect contractual obligations of SAP.

Gender-Neutral Language

As far as possible, SAP documentation is gender neutral. Depending on the context, the reader is addressed directly with "you", or a gender-neutral noun (such as "sales person" or "working days") is used. If when referring to members of both sexes, however, the third-person singular cannot be avoided or a gender-neutral noun does not exist, SAP reserves the right to use the masculine form of the noun and pronoun. This is to ensure that the documentation remains comprehensible.

Internet Hyperlinks

The SAP documentation may contain hyperlinks to the Internet. These hyperlinks are intended to serve as a hint about where to find related information. SAP does not warrant the availability and correctness of this related information or the ability of this information to serve a particular purpose. SAP shall not be liable for any damages caused by the use of related information unless damages have been caused by SAP's gross negligence or willful misconduct. All links are categorized for transparency (see: http://help.sap.com/disclaimer).



go.sap.com/registration/contact.html

© 2017 SAP SE or an SAP affiliate company. All rights reserved.
No part of this publication may be reproduced or transmitted in any form or for any purpose without the express permission of SAP SE or an SAP affiliate company. The information contained herein may be changed without prior notice.
Some software products marketed by SAP SE and its distributors contain proprietary software components of other software vendors. National product specifications may vary.
These materials are provided by SAP SE or an SAP affiliate company for informational purposes only, without representation or warranty of any kind, and SAP or its affiliated companies shall not be liable for errors or omissions with respect to the materials. The only warranties for SAP or SAP affiliate company products and services are those that are set forth in the express warranty statements accompanying such products and services, if any. Nothing herein should be construed as constituting an additional warranty.
SAP and other SAP products and services mentioned herein as well as their respective logos are trademarks or registered trademarks of SAP SE (or an SAP affiliate company) in Germany and other countries. All other product and service names mentioned are the trademarks of their respective companies.
Please see http://www.sap.com/corporate-en/legal/copyright/index.epx for additional trademark information and notices.