.SAP SE or an SAP affiliate company. All rights reserved 2018 ©

PUBLIC

SAP BusinessObjects Business Intelligence platform

Document Version: 4.1 Support Package 12 – 2018-12-14

Data Access Guide

THE BEST RUN SAP

Content

12 . . . . . Document Version History 1

17 . . . . . Introduction to the Data Access Guide 2

17 . . . . . About This Guide 2.1

17 . . . . . Audience 2.2

17 . . . . . Key Tasks 2.3

18 . . . . . Conventions in This Guide 2.4

19 . . . . . Introduction to Data Access 3

19 . . . . . About Connection Server 3.1

19 . . . . . Components of a Connection 3.2

20 . . . . . System Architecture

20 . . . . . Data Access Drivers

21 . . . . . Data Access Configuration Files 3.3

21 . . . . . About the cs.cfg Global Configuration File

22 . . . . . About the Driver Configuration Files

23 . . . . . About the OlapClient.cfg Configuration File

24 . . . . . Deployment Mode 3.4

24 . . . . . Connectivity Services 3.5

25 . . . . . OLAP Connections 3.6

27 . . . . . Learning Data Access Specifics 4

27 . . . . . bit Operating System Support-64 4.1

27 . . . . . bit UNIX Support-64

28 . . . . . bit Microsoft Windows Support-64

29 . . . . . Installation of ODBC Drivers

29 . . . . . Single Sign-On Support 4.2

31 . . . . . Stored Procedures 4.3

31 . . . . . Supported Database Capabilities

31 . . . . . Oracle Stored Procedures

32 . . . . . To Create a Cursor Inside a Package

32 . . . . . To Create an Oracle Stored Procedure

33 . . . . . SAP HANA Stored Procedures

33 . . . . . Teradata Macros

34 . . . . . Connection Pools 4.4

35 . . . . . About Connections of the Pool

35 . . . . . Connection Pool Mode

36 . . . . . Checking Middleware Connection Pooling

36 . . . . . Load Balancing 4.5
36 . . . . . Finding the Best Server
37 . . . . . Load Balancing Logic
38 . . . . . Backward Compatibility
38 . . . . . Memory Allocation 4.6
38 . . . . . To Enable HOARD
39 . . . . . To Disable HOARD
39 . . . . . Activity in CA Wily Introscope Workstation 4.7

40 . . . . . Creating a Connection 5
40 . . . . . Connection Requirements 5.1
40 . . . . . Checking Connection Configuration 5.2
41 . . . . . Displaying Help on the cscheck Tool
42 . . . . . To Run the cscheck Tool
42 . . . . . Check Tool—Function Overview
43 . . . . . Check Tool— list
44 . . . . . Check Tool— driverssearch
45 . . . . . Check Tool— find
46 . . . . . Check Tool— middleware
47 . . . . . Check Tool— accessdriver
48 . . . . . Check Tool— connectivity
50 . . . . . Check Tool— ping
51 . . . . . Check Tool—CMS Information
52 . . . . . Creating JDBC Connections 5.3
53 . . . . . To Create a JDBC Connection with the SBO File
54 . . . . . JDBC SBO Example File Structure
55 . . . . . To Create a JDBC Connection with Extensions
55 . . . . . To Create a Generic JDBC Connection
56 . . . . . JAR File Location Reference
59 . . . . . To Find the Version of a JDBC Driver
60 . . . . . Creating JavaBean Connections 5.4
61 . . . . . To Create a JavaBean Connection
61 . . . . . JavaBean SBO Example File Structure
62 . . . . . To Create a JavaBean Connection with Extensions
62 . . . . . Creating ODBC Connections 5.5
63 . . . . . To Create a Generic ODBC Connection
65 . . . . . To Create a Generic ODBC3 Connection
66 . . . . . Creating Simba JDBC Connections 5.6
66 . . . . . Simba JDBC SBO Example File Structure
67 . . . . . JAR File Location Reference
67 . . . . . To Find the Version of a Simba JDBC Driver
68 . . . . . To Add a New Driver After a Patch Installation 5.7

69 . . . . . To Set the Locale in a Multiple Data Sources Workflow 5.8

70 . . . . . Data Access Driver Reference 6

70 . . . . . Data Access Drivers 6.1
70 . . . . . CSV OpenDriver 6.2
71 . . . . . CSV OpenDriver Capabilities
71 . . . . . CSV OpenDriver - Table Mapping
73 . . . . . CSV File Location
73 . . . . . CSV Schema Detection
76 . . . . . OData Driver 6.3
76 . . . . . OData Driver Capabilities
77 . . . . . OData Service Location
77 . . . . . OData Service Example
79 . . . . . OData Driver - Mapping Namespace, Owner and Qualifier
79 . . . . . OData Driver - Mapping Tables
80 . . . . . OData Driver - Mapping Columns
81 . . . . . OData Driver - Mapping Keys
83 . . . . . OData Driver - Mapping Documentation Elements
83 . . . . . OData Driver - Mapping Entities of Derived Types
84 . . . . . Monitoring the OData Driver Performance
87 . . . . . OData Driver - Nontrivial Behaviors and Restrictions
88 . . . . . OData Driver - Configuring Column Maximum Size
88 . . . . . Authenticating OData Sources
89 . . . . . Tracing the OData Driver Activity
89 . . . . . SAP ERP Driver 6.4
90 . . . . . SAP ERP Driver Capabilities
91 . . . . . SAP ERP Driver - Access to InfoSets and SAP Queries
93 . . . . . SAP ERP Driver - Access to ABAP Functions
96 . . . . . SAP ERP Driver Restrictions
96 . . . . . XML Driver 6.5
97 . . . . . XML Driver Capabilities
97 . . . . . XML File Location
98 . . . . . XML Document and Schema Example
100 . . . . . XML Driver - Mapping Multiple Files
100 . . . . . XML Driver - Mapping Tables
101 . . . . . XML Driver - Mapping Columns
103 . . . . . XML Driver - Mapping Primary and Foreign Keys
104 . . . . . XML Driver - Mapping Mixed Elements
105 . . . . . XML Driver - Mapping Recursive Elements
106 . . . . . XML Driver - Mapping any and anyAttribute
107 . . . . . XML Driver - Mapping anyType and simpleType
109 . . . . . XML Driver - Configuring Column Maximum Size

109 . . . . . Web Service Driver 6.6
110 . . . . . Web Service Driver Capabilities
110 . . . . . Web Service Location
111 . . . . . Web Service Definition Example
113 . . . . . Mapping Rules for Web Services
116 . . . . . Web Service Driver - Configuring Column Maximum Size
117 . . . . . Local Disk Used as a Cache for Sorting Operations 6.7

118 . . . . . Connection Reference 7
118 . . . . . HIVE and Impala Connections 7.1
118 . . . . . To Create JDBC Connection to Apache Hadoop HIVE
122 . . . . . To Create ODBC Connection to Apache Hadoop HIVE
124 . . . . . To Make HIVE Connections Work After Platform Update
124 . . . . . To Create JDBC Connection to Amazon EMR HIVE
125 . . . . . To Create ODBC Connection to Amazon EMR HIVE
125 . . . . . To Create JDBC Connection to Cloudera Impala
126 . . . . . To Create ODBC Connection to Cloudera Impala
127 . . . . . IBM DB2 Connections - Reference Keys Mapped to Null 7.2
127 . . . . . IBM DB2 Update
127 . . . . . IBM Informix Connections 7.3
128 . . . . . To Set the JVM Timezone for IBM Informix Connections
128 . . . . . To Set the Transaction Mode for IBM Informix Connections
129 . . . . . MaxDB 7.9 7.4
129 . . . . . Microsoft Excel, Access 2016 7.5
129 . . . . . Microsoft Parallel Data Warehouse (PDW) 2016 7.6
129 . . . . . Microsoft Analysis Services Connections 7.7
130 . . . . . Microsoft SQL Server Connections 7.8
130 . . . . . Synonym Support for OLE DB Connections to Microsoft SQL Server
131 . . . . . To Set the JVM Options for Connections to Microsoft SQL Server on UNIX
131 . . . . . Oracle 12c R2 7.9
132 . . . . . Oracle Connections 7.10
132 . . . . . Connections to Clusters of Oracle Servers
132 . . . . . To Set the Oracle CURSOR_SHARING Parameter Value
133 . . . . . MySQL Connections - Database Privileges Needed for Some Workflows in the Information Design Tool
133 . . . . . Using Oracle JDBC Connections in the Information Design Tool in Norwegian Bokmål Interface Language
134 . . . . . Oracle EBS Connections 7.11
134 . . . . . Oracle Essbase Connections 7.12
135 . . . . . Oracle Exadata 12 7.13
135 . . . . . Oracle RAC Connections 7.14
136 . . . . . Progress OpenEdge 11.6 7.15

136 . . . . . Salesforce.com Connections 7.16
136 . . . . . .To Configure the Environment
137 . . . . . .To Make salesforce.com Connections Work in the Information Design Tool
137 . . . . . .To Make salesforce.com Connections Work in the Universe Design Tool
138 . . . . . .To Create Simba JDBC Connection in Information Design Tool
138 . . . . . .To Create Simba ODBC Connection in Information Design Tool
139 . . . . . .SAP Business Warehouse Connections 7.17
139 . . . . . .To Enable SAP BW 64-bit Connections
139 . . . . . .SAP ERP Connections - Driver Failed to Load 7.18
140. . . . . .SAP HANA Connections 7.19
141 . . . . . .Creating an SAP HANA Connection
142 . . . . . .Editing an SAP HANA Connection
143. . . . . .Before Configuring Single Sign-On for SAP HANA Connections
143. . . . . .To Configure Single Sign-On to SAP HANA for the Information Design Tool
144. . . . . .To Configure Single Sign-On to SAP HANA for Web Intelligence
145 . . . . . .To Configure Single Sign-On to SAP HANA for Web Intelligence Rich Client
146. . . . . .To Configure the Java Virtual Machine for Instrumentation with SAP HANA Connections
146 . . . . . .SAP HANA 2.0 SPS2 7.20
147 . . . . . .SAP MaxDB Connections 7.21
147. . . . . .SAP BW Connections 7.22
147 . . . . . .Requirements for Connecting Data Federator to SAP BW
148 . . . . . .Requirements for Making SAP BW Connections Work in the Information Design Tool
148 . . . . . .Requirements for Accessing Multisource-Enabled Universes on SAP BW
148 . . . . . .SAS Connections 7.23
149 . . . . . .Installing Drivers for SAS Connections
149. . . . . .Teradata Connections - Mapping Teradata Database to Current Owner 7.24
150. . . . . .Teradata 16 7.25
150 . . . . . .Amazon Connections 7.26
150. . . . . .To Create Simba JDBC Connection to Amazon RedShift
150 . . . . . .To Create Simba ODBC Connection to Amazon RedShift
151 . . . . . .Vertica 8.1 7.27

152. . . . . .Creating a Connection to Data Federator XI 3.0 Query Server 8
152. . . . . .About Data Federator XI 3.0 Query Server Connections 8.1
153 . . . . . .Configuring the Connection Wizard for a Data Federator JDBC or ODBC Connection 8.2
153 . . . . . .Configuring Data Federator ODBC Connections 8.3
154. . . . . .Configuring the Data Federator ODBC Middleware
155 . . . . . .Configuring Connection Server for a Data Federator ODBC Connection
Configuring Web Intelligence Rich Client Connections Using Data Federator ODBC Middleware 8.4
155 . . . . . .
Configuring the Data Federator ODBC Middleware for a Connection to Web Intelligence Rich
156 . . . . . .Client

Configuring Connection Server for a Web Intelligence Rich Client Connection to Data Federator 157
Setting the Windows RichClient Registry Key 157
Configuring Connection Server for Connections of Web Intelligence Rich Client or Universe Design Tool to Data Federator 157

Configuring Data Access Global Parameters 159 — 9
About Global Parameters 159 — 9.1
About the cs.cfg Configuration File 159 — 9.2
To View and Edit the cs.cfg File 160 — 9.3
Configuring the Global Settings Parameters 160 — 9.4
Charset List Extension 161
Config File Extension 161
Description Extension 161
Ignore Driver Load Failure 162
Load Drivers On Startup 162
Max Pool Time 163
Setup File Extension 164
SQL External Extension 164
SQL Parameter Extension 164
Strategies Extension 165
Validate Configuration Files 165
Validate XML Streams 165
JVM Settings 166
Setting the Deployment Mode 166 — 9.5
Configuring the Deployment Mode 167 — 9.6
Configuring the Drivers to Load 168 — 9.7
Setting One Connectivity per Machine 169
Configuring the CORBA Access Protocols 169 — 9.8
Activating Logs and Traces of Connection Server and Drivers 169 — 9.9
About the _trace.ini Configuration File 170
Activating Logs and Traces in the cs.cfg File 173
To activate Logs and Traces in Library Mode 173
To activate Logs and Traces in Server Mode 174
Reading Logs and Traces 174
Activating Logs and Traces for the OLAP Client 176 — 9.10
Example of Log 176

Configuring Data Access Driver Parameters 178 — 10
Configuring Driver Parameters 178 — 10.1
Data Access Configuration Files 178
Installed SBO Files 179

182 . . . . . To View and Edit SBO Files
183 . . . . . To Customize SBO Files
183 . . . . . To Check Connections Dynamically
184 . . . . . JDBC Driver Properties
185 . . . . . About DataDirect ODBC Drivers 10.2
185 . . . . . To Enable the Use of DataDirect Branded Drivers

187 . . . . . SBO Parameter Reference 11
187 . . . . . SBO File Structure 11.1
188 . . . . . SBO Parameter Description 11.2
189 . . . . . Common SBO Parameters 11.3
189 . . . . . Array Bind Available
189 . . . . . Array Bind Size
190 . . . . . Array Fetch Available
190 . . . . . Array Fetch Size
191 . . . . . BigDecimal Max Display Size
192 . . . . . Binary Max Length
192 . . . . . Bucket Split Size
193 . . . . . Catalog Separator
194 . . . . . CharSet Table
194 . . . . . Description File
194 . . . . . Dictionary Transaction Mode
195 . . . . . Driver Capabilities
195 . . . . . Driver Name
196 . . . . . Escape Character
196 . . . . . Extensions
197 . . . . . Family
197 . . . . . Force Execute
197 . . . . . Identifier Case
198 . . . . . Identifier Quote String
198 . . . . . Include Synonyms
199 . . . . . Integer Max Length
199 . . . . . Introscope Available
200 . . . . . Max Rows Available
200 . . . . . Native Int64 Available
200 . . . . . Optimize Execute
201 . . . . . Owners Available
201 . . . . . Qualifiers Available
202 . . . . . Query TimeOut Available
202 . . . . . Quote Identifiers
202 . . . . . Skip SAML SSO

203 . . . . . SQL External File
203 . . . . . SQL Parameter File
204 . . . . . SSO Available
204 . . . . . Strategies File
204 . . . . . String Max Length
205 . . . . . Temp Data Dir
206 . . . . . Transactional Available
207 . . . . . Type
207 . . . . . Unicode
208 . . . . . URL Format
209 . . . . . XML Max Size
209 . . . . . JavaBean SBO Parameters 11.4
209 . . . . . JavaBean Class
210 . . . . . JCO SBO Parameters 11.5
210 . . . . . ERP Max Rows
210 . . . . . JDBC SBO Parameters 11.6
210 . . . . . Connection Shareable
211 . . . . . Escape Character Available
211 . . . . . ForeignKeys Available
212 . . . . . Get Extended Column
212 . . . . . JDBC Class
213 . . . . . PrimaryKey Available
213 . . . . . PVL Available
213 . . . . . Shared Connection
214 . . . . . JDBC ResultSet Type
215 . . . . . JDBC ResultSet Concurrency
215 . . . . . OData SBO Parameters 11.7
216 . . . . . Enforce Max Protocol Version
216 . . . . . ODBC SBO Parameters 11.8
216 . . . . . CharSet
217 . . . . . Connection Status Available
217 . . . . . Cost Estimate Available
217 . . . . . Empty String
218 . . . . . ODBC Cursors
218 . . . . . SQLDescribeParam Available
219 . . . . . SQLMoreResults Available
219 . . . . . Use DataDirect OEM Driver
219 . . . . . V5toV6DriverName
220 . . . . . OLE DB SBO Parameters 11.9
220 . . . . . Enumerator CLSID

220 . . . . . Provider CLSID
221 . . . . . OLE DB OLAP SBO Parameters 11.10
221 . . . . . MSOlap CLSID
221 . . . . . Sybase SBO Parameters 11.11
222 . . . . . Driver Behavior
222 . . . . . Password Encryption
222 . . . . . Quoted Identifier
223 . . . . . Recover Errors
223 . . . . . Text Size
224 . . . . . Teradata SBO Parameters 11.12
224 . . . . . Replace Current Owner With Database

225 . . . . . Configuring Database Capability Parameters 12
225 . . . . . About Database Capability Parameters 12.1
225 . . . . . About PRM Files 12.2
226 . . . . . PRM Parameter File Structure
227 . . . . . To View and Edit PRM Files 12.3
227 . . . . . To Verify and Add Analytic Function Support to PRM Files 12.4
228 . . . . . To View and Edit a Function Help Text File 12.5
228 . . . . . To Edit the Help Text for a PRM Function 12.6

230 . . . . . PRM Parameter Reference 13
230 . . . . . PRM file Configuration Reference 13.1
230 . . . . . ANALYTIC_CLAUSE
231 . . . . . ANALYTIC_FUNCTIONS
231 . . . . . CALCULATION_FUNCTION
232 . . . . . CONSTANT_SAMPLING_SUPPORTED
232 . . . . . DISTINCT
232 . . . . . EXT_JOIN
233 . . . . . FULL_EXT_JOIN
233 . . . . . GROUP_BY
233 . . . . . GROUP_BY_SUPPORTS_COLUMN_INDEX
234 . . . . . GROUP_BY_SUPPORTS_COMPLEX
234 . . . . . GROUP_BY_SUPPORTS_CONSTANT
235 . . . . . HAVING
235 . . . . . INTERSECT
236 . . . . . INTERSECT_ALL
236 . . . . . INTERSECT_IN_SUBQUERY
236 . . . . . JOIN
237 . . . . . LEFT_EXT_JOIN
237 . . . . . LEFT_OUTER

238 . . . . . LIKE_SUPPORTS_ESCAPE_CLAUSE
238 . . . . . MINUS
238 . . . . . MINUS_ALL
239 . . . . . MINUS_IN_SUBQUERY
239 . . . . . ORDER_BY
239 . . . . . ORDER_BY_REQUIRES_SELECT
240 . . . . . ORDER_BY_SUPPORTS_COLUMN_INDEX
240 . . . . . PERCENT_RANK_SUPPORTED
241 . . . . . RANK_SUPPORTED
241 . . . . . RIGHT_EXT_JOIN
241 . . . . . RIGHT_OUTER
242 . . . . . SEED_SAMPLING_SUPPORTED
242 . . . . . SELECT_SUPPORTS_NULL
242 . . . . . SUBQUERY_IN_FROM
243 . . . . . SUBQUERY_IN_IN
243 . . . . . SUBQUERY_IN_WHERE
243 . . . . . TECHNICAL_COLUMN_NAME_PATTERN
244 . . . . . UNION
244 . . . . . UNION_ALL
244 . . . . . UNION_IN_SUBQUERY

246 . . . . . Data Type Conversion Reference 14
246 . . . . . Data Type Conversion 14.1
247 . . . . . CSV File Data Types
248 . . . . . JDBC Data Types
250 . . . . . ODBC Data Types
252 . . . . . OData Data Types
253 . . . . . OLE DB Data Types
254 . . . . . Oracle OCI Data Types
255 . . . . . SAP ERP Data Types
256 . . . . . SAP HANA Data Types
257 . . . . . Sybase CTL Data Types
258 . . . . . XML Data Types
260 . . . . . Large Variable Length Data Restriction 14.2
260 . . . . . Data Type Mapping for Multisource-Enabled Universes 14.3

Document Version History 1

.The following table provides an overview of the most important document changes

Changes	Date	Version
.[70 New OData, XML and Web Service drivers, see Data Access Drivers [page Support of single sign-on for Teradata 13, Teradata 14, and Sybase IQ, see .[29 Single Sign-On Support [page Support of SAP HANA stored procedures, see SAP HANA Stored Procedures .[33 [page For SAP ERP connections, simplified mapping of optional input columns, see .[93 SAP ERP Driver - Access to ABAP Functions [page For SAP HANA connections, support of new SAP HANA SPS 05 release, OLAP connections, single sign-on through SAML protocol, SSL protocol, and 64-bit .[140 UNIX platforms through ODBC, see SAP HANA Connections [page Support of HIVE 0.9 connections through JDBC, see HIVE and Impala .[118 Connections [page New logger for Connection Server activity, see Activating Logs and Traces of .[169 Connection Server and Drivers [page How to activate OLAP Client logs, see Activating Logs and Traces for the OLAP .[176 Client [page Support of DataDirect ODBC 7.0 drivers, see About DataDirect ODBC Drivers .[185 [page New SBO parameter for any data access driver, see Dictionary Transaction .[194 Mode [page New SBO parameters for MySQL connections, see JDBC ResultSet Type [page .[215 214] and JDBC ResultSet Concurrency [page New SBO parameter for Teradata connections, see Replace Current Owner .[224 With Database [page New SBO parameter for skipping SAML with SAP HANA connections, see Skip .[202 SAML SSO [page	May 2013	SAP BusinessObjects Business Intelligence platform 4.1

Changes	Date	Version
New connectivities are available, see the *Product Availability Matrix* for more .information Description of the connection pool mode, see Connection Pool Mode [page .[35 To check connections stored on the CMS , see Check Tool—CMS Information .[51 [page To find the JDBC driver version, see To Find the Version of a JDBC Driver [page .[59 Tuning the OData connection timeout to improve the performance, see .[84 Monitoring the OData Driver Performance [page Support of connections to different versions of the HIVE database, see HIVE .[118 and Impala Connections [page UNIX settings for Microsoft SQL Server connections, see To Set the JVM .[131 Options for Connections to Microsoft SQL Server on UNIX [page To set the `CURSOR_SHARING` parameter value, see Oracle Connections [page .[132 Support of 64-bit connections to SAP BW for `.unv` universes, see SAP .[139 Business Warehouse Connections [page If the SAP ERP driver fails to load, see SAP ERP Connections - Driver Failed to .[139 Load [page Support of SAP HANA database 1.0 SPS 06, see SAP HANA Connections [page .[140 Security requirements for SAP BW connections, see SAP BW Connections .[147 [page `cs.cfg` file example of Connection Server in server mode, see Setting the .[166 Deployment Mode [page Date format to be used in queries to SAP ERP systems, see SAP ERP Data .[255 Types [page SAP HANA data types and their equivalent in the data foundations, see SAP .[256 HANA Data Types [page	August 2013	SAP BusinessObjects Business Intelligence platform 4.1 Support Package 1

Changes	Date	Version
New connectivities are available, see the *Product Availability Matrix* for more .information Update of the 64-bit Microsoft Windows support section, see 64-bit Microsoft .[28 Windows Support [page Support of locale in native connections of multisource-enabled universes, see .[69 To Set the Locale in a Multiple Data Sources Workflow [page To install the Apache Hadoop HIVE driver after a platform update, see To Make .[124 HIVE Connections Work After Platform Update [page Synonym columns of Microsoft SQL Server through OLE DB not supported, see .[130 Microsoft SQL Server Connections [page Update of the Oracle Essbase section, see Oracle Essbase Connections [page .[134 Update of the SAP BW Connections section, see SAP Business Warehouse .[139 Connections [page Support of SAP HANA database 1.0 SPS 08, see SAP HANA Connections [page .[140 To support new analytic functions, see To Verify and Add Analytic Function .[227 Support to PRM Files [page	November 2013	SAP BusinessObjects Business Intelligence platform 4.1 Support Package 2
New connectivities are available, see the *Product Availability Matrix* for more .information Direct support for the SQL Server 2014 datasource: Supported middlewares (are ODBC and JDBC (Microsoft has deprecated OLE DB To add a new driver after patch installation , see To Add a New Driver After a [68 Patch Installation [page For information on MySQL Connections - Database Privileges Needed for Some Workflows in the Information Design Tool, see MySQL Connections - Database Privileges Needed for Some Workflows in the Information Design Tool [page [133	February 2014	SAP BusinessObjects Business Intelligence platform 4.1 Support Package 3
New connectivities are available, see the *Product Availability Matrix* for more .information [166 To know about the new feature-JVM setting, see JVM Settings [page	June 2014	SAP BusinessObjects Business Intelligence platform 4.1 Support Package 4

Changes	Date	Version
• [56 Updated the table in JAR File Location Reference [page • Updated Installed SBO Files [page 179] section • Updated table with 0.13 (Simba JDBC4) dabase informtion in To Create [118 JDBC Connection to Apache Hadoop HIVE [page To Create ODBC Connection to Apache Hadoop HIVE, see To Create ODBC [122 Connection to Apache Hadoop HIVE [page To Create ODBC Connection to Amazon EMR HIVE, see To Create ODBC [125 Connection to Amazon EMR HIVE [page To Create ODBC Connection to Cloudera Impala, see To Create ODBC [126 Connection to Cloudera Impala [page	October 2014	SAP BusinessObjects Business Intelligence platform 4.1 Support Package 5
:Following are the new sections added in this guide • Creating Simba JDBC Connections"section under "Creating a" Connection" main section • Amazon Connections" section under "Connection Reference" main" section • To Create Simba JDBC Connection in Information Design Tool" section" under "Salesforce.com Connections" main section • To Create Simba ODBC Connection in Information Design Tool" section" under ""Salesforce.com Connections" main section . Added "Progress" database details in "JAR File Location Reference" section	May, 2015	SAP BusinessObjects Business Intelligence platform 4.1 Support Package 6
.Added entry "Ingres Database 10 " in "JAR File Location Reference" section	June, 2016	SAP BusinessObjects Business Intelligence platform 4.1 Support Package 7
.No changes	2016	SAP BusinessObjects Business Intelligence platform 4.1 Support Package 8
No changes	2017	SAP BusinessObjects Business Intelligence platform 4.1 Support Package 9

Changes	Date	Version
:New data source connections available • .IBM DB2 can be used on Linux, Unix, and Windows 11.1 • IBM DB2 version 12 can be used on z/OS7.1.2 • MaxDB 7.9 • MS Parallel Data Warehouse (PDW) 2016 • Oracle Exadata 12 • Oracle 12c R2 • Progress OpenEdge 11.6 • SAP HANA 2.0 SPS2 • Teradata 16 • Vertica 8.1 .Refer to Chapter 7: Connection Reference	July 2017	SAP BusinessObjects Business Intelligence platform 4.1 Support Package 10
:New data source connections available • Microsoft Excel, Access 2016 • Oracle 12c R2 .Refer to Chapter 7: Connection Reference	February 2018	SAP BusinessObjects Business Intelligence platform 4.1 Support Package 11
:New data source connections available • Ingres • Vertica • MySQL • SQL Server • IBM DB2 • IQ15 .Refer to Chapter 7: Connection Reference	December 2018	SAP BusinessObjects Business Intelligence platform 4.1 Support Package 12

Introduction to the Data Access Guide 2

About This Guide 2.1

The Data Access Guide helps you learn about the Connection Server functionality and how to configure Connection Server to enable connections of SAP BusinessObjects Business Intelligence platform 4.1 SP1 to .production databases

:The Data Access Guide provides the following information

- Learning Connection Server fundamentals
- Learning about data access drivers for CSV, OData, SAP ERP, and XML data sources
- Creating a JDBC, ODBC, or Javabean connection
- Configuring data access parameters

> **i Note**
>
> It also provides information for configuring some relational connections that rely on the data federation .service, and OLAP connections

Audience 2.2

:The Data Access Guide is intended for the following audience

- SAP BusinessObjects application users in charge of creating connections to data sources
- System administrators who are responsible for configuring, managing, and maintaining a BI platform installation

Key Tasks 2.3

The Data Access Guide provides you with key information for managing configuration parameters and :establishing connections. For each of these following tasks, refer to the appropriate section below

- ?How to set the server working mode

- ?How to choose the drivers you want to load
- ?How to configure data access drivers
- ?How to check connection configuration
- ?How to create JDBC connections
- ?How to create SAP HANA connections

> **i Note**
>
> For administrative tasks such as starting and stopping Connection Server, managing properties and .metrics, refer to the *SAP BusinessObjects Business Intelligence platform Administrator Guide*

Related Information

[167 Configuring the Deployment Mode [page
[168 Configuring the Drivers to Load [page
[182 To View and Edit SBO Files [page
[42 To Run the cscheck Tool [page
[52 Creating JDBC Connections [page
[140 SAP HANA Connections [page

Conventions in This Guide 2.4

In this guide, the variable `<connectionserver-install-dir>` is the installation root path for the data access files used by SAP BusinessObjects client tools. On Microsoft Windows, the default `<connectionserver-install-dir>` stands for `C:\Program Files\SAP Business Objects\SAP .BusinessObjects Enterprise XI 4.0\dataAccess`

The variable `<bip-install-dir>` is the installation root path of the BI platform or Client Tools. On Microsoft Windows (64-bit), it stands for the `C:\Program Files (x86)\SAP Business Objects\SAP .BusinessObjects Enterprise XI 4.0` directory

> **⚠ Caution**
>
> In the data access configuration files, use the escape sign \ with the backslash \ in file paths if you deploy .the BI platform on Microsoft Windows

Introduction to Data Access 3

About Connection Server 3.1

Connection Server is the data access software that manages the connection between an SAP BusinessObjects .application and a data source

Connection Server allows applications such as Universe Design Tool, Information Designer Tool and SAP .BusinessObjects Web Intelligence to connect to and run queries against a data source

Connection Server does not have a user interface. You create and administer connections from the user .interface of these applications, or by editing Connection Server configuration files

- Creating connections
  .You create connections using the connection wizard of the BI platform Client Tools

> **i Note**
>
> The connection wizard of the Universe Design Tool is the New Connection wizard. In the Information Designer Tool, it can be either the New Relational Connection wizard or the New OLAP Connection .wizard. See the application user guides to learn how to use the connection wizard

- Optimizing data access
  You can optimize the way that data is passed through Connection Server by modifying data access configuration files. These files are in XML format, and are installed with Connection Server. You can set .parameter values to apply to a specific data access driver, or to all installed data access drivers

Components of a Connection 3.2

:A data access connection consists of the following components

- Connection Server is the software that manages the connection between the application and the data .source. For example, Connection Server handles requests for data from the application
- A data access driver is the database-specific software component that manages the connection between .Connection Server and the database middleware
- :Configuration files define parameters to configure the connection between the following systems
  - The application and Connection Server
  - The application and the data access driver
  - Connection Server and the data access driver

System Architecture 3.2.1

The diagram below details where Connection Server and data access drivers fit into an SAP BusinessObjects .configuration

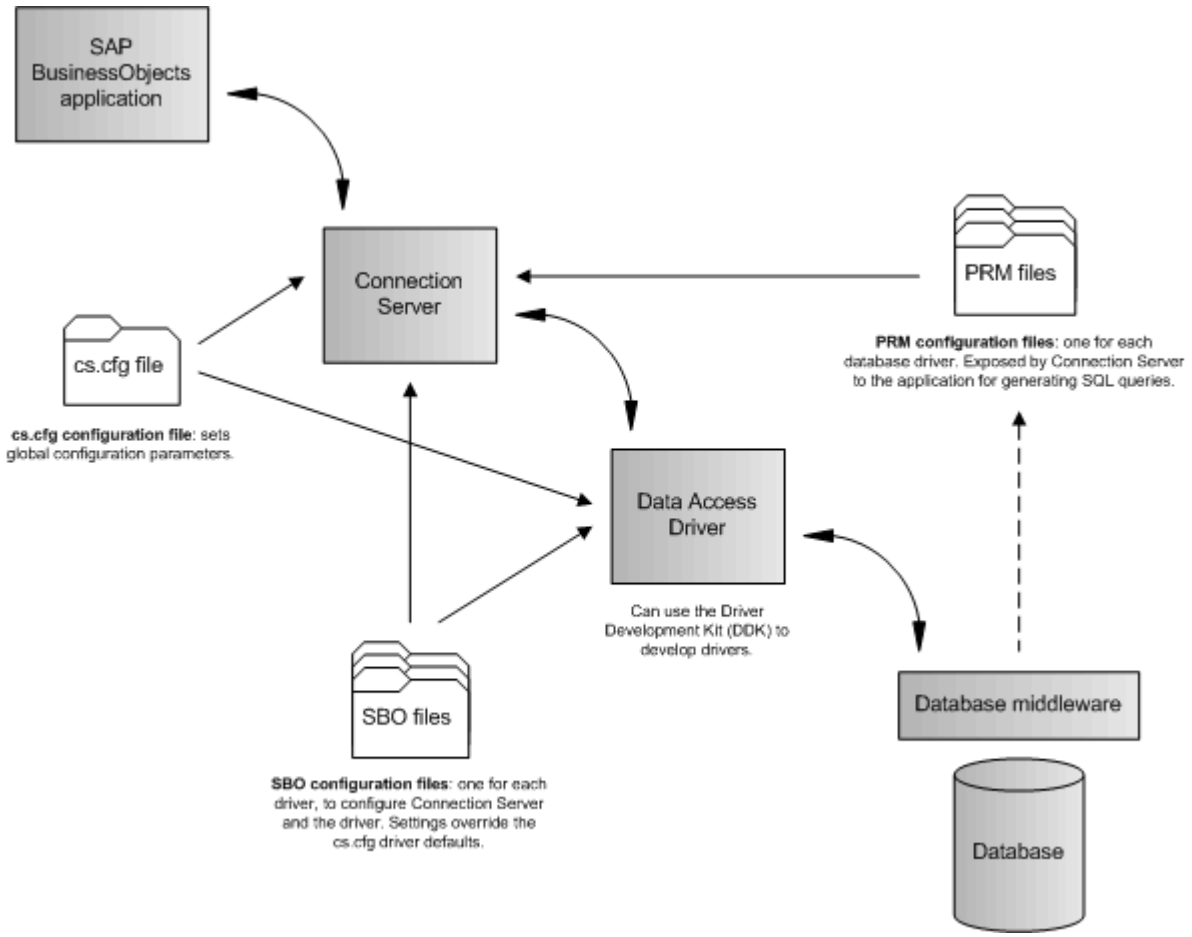

Data Access Drivers 3.2.2

Data access drivers provide the connection between Connection Server and a data source. A database requires .a data access driver to allow access by the SAP BusinessObjects application

SAP BusinessObjects applications include data access drivers that you can use to configure connections to .your databases. The data access drivers that are included can depend on your license

Before you can create a connection to a database for which you do not have a driver, you need to obtain the :required drivers. The following options are available for obtaining a driver

- .Contact your SAP representative to determine if there is a driver available, and if you are licensed to use it
- Use the Driver Development Kit (DDK) to develop a driver to use. Contact your SAP representative for .details

When you create a new connection, you select the appropriate data access driver for the target data source. For example, if you access an Oracle 10g database, you must install the appropriate middleware (Oracle 10g .Client), then the SAP BusinessObjects Oracle data access driver

> ⚠ Caution
>
> Excel bean (`bean_excel.jar`) and CSV (`dbd_open_sample.jar`) data access drivers are driver samples. You should not use them as is, but as starting points for developing more complex drivers by .using the DDK

For an up-to-date list of supported data access drivers, check the SAP Service Marketplace at https:// .support.sap.com/pam, or contact your SAP representative

For more information about the DDK, refer to the *Data Access Driver Java SDK Developer Guide* at http:// .boc.sdn.sap.com

Data Access Configuration Files 3.3

Data access configuration files come with installation of the BI platform. They can be divided into the following :levels

- Global level
  .The `cs.cfg` configuration file applies to all connections
- Driver level
  .The SBO configuration files apply to specific drivers
- OLAP connections
  .The `OlapClient.cfg` configuration file applies to OLAP connections for `.unx` universes

In addition to the configuration files that control a connection, each data access driver has an associated PRM configuration file. These files control the way in which an application generates SQL depending on the database .software capabilities. They are used by applications such as the information design tool

Related Information

[25 OLAP Connections [page
[159 About the cs.cfg Configuration File [page
[178 Data Access Configuration Files [page

About the cs.cfg Global Configuration File 3.3.1

:The `cs.cfg` global configuration file used by all data access drivers is installed in the following location

- connectionserver-install-dir>\connectionServer>

.The cs.cfg file contains parameters that apply to all installed data access drivers

Related Information

[159 About Global Parameters [page

About the Driver Configuration Files 3.3.2

:The configuration files used by data access drivers are installed in the following path

- :On a Microsoft Windows system
  <connectionserver-install-dir>\connectionServer\<RDBMS>
- :On a UNIX system
  <connectionserver-install-dir>/connectionServer/<RDBMS>

where <RDBMS> is either the name of the network layer or the database middleware that uses the configuration .file

.The files listed below have parameters that apply to installed data access drivers

Example	Description	Can Be Edited	Driver Specific File
oracle.sbo	Each data access driver has a SBO file. Defines the specific connectivity configuration for each driver .and target database	Yes	driver> .sbo>
oracle.prm	Each data access driver has a PRM file. Defines parameters that affect the way that an application .generates SQL	Yes	driver> .prm>

Example	Description	Can Be Edited	Driver Specific File
`oracleen.cod`	Each data access driver has a COD file. Stores information related to connection definitions. Defines the fields that appear when you create a .new connection **i Note** Do not modify these .files	No	`driver><language> .co> d`
`oracle.rss`	Each data access driver has a RSS file. Stores predefined SQL sentences, which are .used by Connection Server	No	`driver>.rss>`
`oracle.stg`	The data access driver can have a strategy file. See SBO file parameter reference for .more information	No	`driver>.stg>`

Related Information

[188 SBO Parameter Description [page
[230 PRM file Configuration Reference [page
[225 About Database Capability Parameters [page

About the OlapClient.cfg Configuration File 3.3.3

:On Microsoft Windows, the `OlapClient.cfg` file is stored in the following location

- `bip-install-dir>\win32_x86>`

.In the `OlapClient.cfg` file, you can configure parameters of the `OlapClient` section only

Related Information

[176 Activating Logs and Traces for the OLAP Client [page

Deployment Mode 3.4

:Connection Server can run in the following deployment modes

- (Library mode (in-proc
  Connection Server is included in the client process. Most SAP BusinessObjects applications use .Connection Server in library mode
- Server mode
  Connection Server is a CORBA server and is accessed remotely. Connection Server serves the CORBA and .HTTP clients to address the 2-tier and web tier deployment modes respectively

See the *SAP BusinessObjects Business Intelligence platform Administrator Guide* for more information on the .deployment scenarios

Related Information

[166 Setting the Deployment Mode [page
[167 Configuring the Deployment Mode [page
[168 Configuring the Drivers to Load [page

Connectivity Services 3.5

Three Connection Server server instances come with the default BI platform installation. They are grouped .(under *Connectivity Services* in the Central Management Console (CMC

:Connection Server servers host the following services

- (Native Connectivity Service (64-bit
- (Native Connectivity Service (32-bit on Microsoft Windows only

The Adaptive Processing Server hosts the Adaptive Connectivity Service, which allows user applications to .access Java-based data sources remotely

When starting up, the Connectivity Services advertise the list of the data sources they support on the BI platform cluster, so that SAP BusinessObjects applications are able to look up and use the appropriate server instance. Applications look for data sources through Connection Server frst in library mode, then in the server .mode

Connection vs. Service

When Connection Server is used in library mode, the list of available data sources is defined by the data access drivers and middleware installed on the local machine. When Connection Server is used in server mode, the list of data sources also includes those supported by each server instance that runs on the back-end system of the .BI platform

Each server instance supports a subset of the data sources supported by the Data Access layer. The subset :depends on the following parameters

- (The CS server implementation technology (C++ or Java
- (The host operating system (UNIX flavors or Microsoft Windows
- The drivers you can select when installing the BI platform
- The active data sources you can select for each server instance in the CMC

.The following table describes which Connectivity Service each kind of connection can use

Connection	Connectivity Service	Description
All 64-bit native data sources	Native Connectivity Service	.Support of ODBC, OLE DB, OCI, and so on
All 32-bit native data sources	Native Connectivity Service	Support of data sources available in 32-bit only. This service is only available on Microsoft .Windows
Java-based data sources	Adaptive Connectivity Service	Support of all Java-based middleware. This service is a Java implementation based on the .Platform Java Service (PJS) framework

Example

- .A 64-bit native data source is Oracle database through Oracle OCI
- .A 32-bit native data source is Microsoft Excel 2007 through ODBC
- .A Java-based data source is Microsoft SQL Server 2008 R2 through JDBC

OLAP Connections 3.6

.The Data Access layer allows the BI platform to connect to OLAP data sources

The `.unv` universes based on OLAP data sources use connections managed by the 32-bit Connection Server. .The present release allows SAP BW connections to use either the 32-bit or the 64-bit Connection Server

The `.unx` universes based on OLAP data sources use connections managed by the OLAP Client component of .the BI platform

For the list of the supported OLAP data sources, see the *Product Availability Matrix*. For creating OLAP .connections, see the *Information Design Tool User Guide*

Related Information

[28 bit Microsoft Windows Support [page-64
[139 SAP Business Warehouse Connections [page

Learning Data Access Specifics 4

bit Operating System Support-64 4.1

:SAP BusinessObjects provides releases of the BI platform for the following operating systems

- bit versions of Microsoft Windows-32
- bit versions of Microsoft Windows and UNIX flavors-64

The Data Access layer then provides data access drivers that are able to run either in a 32-bit or a 64-bit .environment

The following sections give details on what this implies for database middleware support in 32-bit or 64-bit .environments

For the complete list of data sources supported on 64-bit operating systems, see the *Product Availability .Matrix*

> **i Note**
>
> The DDK provides data access driver samples that are able to run either in a 32-bit or in a 64-bit .environment. For more information about the DDK, see the *Data Access Driver Java SDK Developer Guide*

bit UNIX Support-64 4.1.1

Connection Server comes with the BI platform and then supports installation on 64-bit UNIX environments as .in-proc or as a remote server

> **⚠ Caution**
>
> You must make sure you install 64-bit middleware to run database connections through Connection .Server

Some vendors do not provide 64-bit middleware for the following databases and network layers on UNIX. They :are only available on Microsoft Windows

- DB2 UDB for iSeries V5 with Client Access AS400
- DB2 UDB for iSeries V6 with Client Access AS400
- DB2 for i v6.1 with Client Access AS400
- DB2 for i v7.1 with Client Access AS400

- Generic data source through OLE DB
- Microsoft Access 2010 and 2013 through ODBC
- Microsoft Excel 2010 and 2013 through ODBC
- Microsoft SQL Server 2008, 2008 R2 and 2012 through OLE DB

4.1.2 bit Microsoft Windows Support-64

→ Remember

.This section is only about databases used for `.unv` universes

Connection Server comes with the BI platform and then supports installation on both 32-bit (as in-proc) and .(64-bit Microsoft Windows environments (as in-proc and remote server

:Vendors do not provide 64-bit middleware for the following databases through ODBC on Microsoft Windows

- Ingres database 9
- Microsoft Access 2007 and Microsoft Excel 2007
- PostgreSQL 8
- Text files
- Data Federator XI 3.0 Query Server
- Salesforce.com

:bit Microsoft Windows also does not support the following OLAP databases and their middleware-64

- Microsoft Analysis Services database through OLE DB for OLAP
- Oracle Essbase 9 and 11 through Oracle Essbase Client

For all these data sources, the Data Access layer is able to work with 32-bit middleware on 64-bit versions of Microsoft Windows. This functionality is handled through a specific deployment that consists of two Connection Servers running simultaneously in server mode. The first one is 32-bit and runs connections to data sources that cannot handle 64-bit middleware, while the second one is 64-bit and runs connections to the .other data sources. As the `cs.cfg` file is common to both servers, they share the same configuration

! Restriction

This architecture implies you cannot run the same data access driver on both servers. However, you can establish a generic ODBC connection on either 32-bit Connection Server or 64-bit Connection Server, but .not on both servers at the same time

Related Information

[134 Oracle Essbase Connections [page
[139 SAP Business Warehouse Connections [page
[190 Array Fetch Size [page

Installation of ODBC Drivers 4.1.3

For installations of the information design tool or universe design tool on a 32-bit Windows operating system, the drivers for any ODBC data sources that need to be created, tested, and accessed in the tool should be defined using the ODBC Data Source Administrator that can be found at the following location on the physical :machine where the tool is installed

- `C:\Windows\System32\odbcad32.exe`

For installations of the information design tool or universe design tool on a 64-bit Windows operating system, the drivers for any ODBC data sources that need to be created, tested, and accessed in the tool should be defined using the 32-bit version of ODBC Data Source Administrator that can be found at the following location :on the physical machine where the tool is installed

- `C:\Windows\SysWOW64\odbcad32.exe`

For the information design tool, the ODBC data sources that need to be used by the server components are defined using the ODBC Data Source Administrator that can be found at the following location on the physical :machine where the server components are installed

- bit version: `C:\Windows\System32\odbcad32.exe` (recommended to use when 64-bit database-64 (middleware exists
- bit version: `C:\Windows\SysWOW64\odbcad32.exe` (use when only 32-bit database middleware-32 (exists

> **i Note**
>
> If the information design tool or universe design tool is using ODBC DSN for universe data sources, DSN with the same names should be created on the physical machine where server components are installed .for the SAP BusinessObjects reporting applications that use the published universes

.For information, refer to *SAP BusinessObjects Business Intelligence platform Installation Guide*

Single Sign-On Support 4.2

The BI platform provides single sign-on (SSO) authentication when installed on the following platforms and :with the following connectivities

Description	Data Source
Single sign-on to BI platform is provided by Windows AD .with Kerberos	Microsoft Analysis Services on Microsoft Windows
Single sign-on to BI platform is provided by Windows AD .with Kerberos	Microsoft SQL Server through ODBC or OLE DB on Microsoft Windows

Description	Data Source
.Single sign-on to BI platform is provided by LDAP	Oracle through OCI on Microsoft Windows
You enable SSO by installing and configuring the authentication plugin that comes with the platform. Users log into the BI platform from an SAP BusinessObjects application by using their EBS credentials (username and .(password	Oracle EBS through OCI on all platforms
You enable SSO by installing and configuring SAP Authentication. Users log into the BI platform from an SAP BusinessObjects application by using their SAP BW .credentials	SAP BW through OLAP BAPI on all platforms
You enable SSO by installing and configuring SAP Authentication. Users log into the BI platform from an SAP BusinessObjects application by using their SAP ERP .credentials	SAP ERP systems through SAP Java Connectivity (JCo) 3.x on all platforms
The SSO provided is SSO to database and uses either Windows AD with Kerberos (in ODBC, JDBC and OLAP) or SAML protocol (in JDBC and OLAP). Users log into the BI platform from an SAP BusinessObjects application by using .their Windows AD credentials	SAP HANA database 1.0 SPS 08 through ODBC, JDBC on all platforms and OLAP on Microsoft Windows, Linux and AIX
Single sign-on to BI platform is provided by Windows AD .with Kerberos	Sybase IQ database through ODBC on Microsoft Windows
Single sign-on to BI platform is provided by Windows AD .with Kerberos	Teradata 13 and Teradata 14 through ODBC on Microsoft Windows

For more information about SSO, refer to the *SAP BusinessObjects Business Intelligence platform Administrator .Guide*

Related Information

[134 Oracle EBS Connections [page
[89 SAP ERP Driver [page
[140 SAP HANA Connections [page

Stored Procedures 4.3

Connection Server is able to manage data from data sources that result either from SQL query or stored .procedure execution

Stored procedures are SQL scripts that are stored as executable code in an RDBMS. They can receive .arguments and return data

:Stored procedures for the following databases and network layers are supported in the BI platform

- DB2 UDB and iSeries through CLI driver
- Sybase Adaptive Server through CTLIB
- Javabean
- DB2 UDB, Derby, HSQL DB, Informix, Microsoft SQL Server, MySQL 5, Oracle, SAP HANA and Sybase, all through JDBC
- Oracle through OCI
- DB2 iSeries, Informix, Microsoft SQL Server, SAP HANA, Sybase ASIQ, Sybase SQL Anywhere, and Teradata (only macros) all through ODBC
- Microsoft SQL Server through OLE DB

Supported Database Capabilities 4.3.1

Connection Server only supports stored procedures that return data as result sets, that is, tables. This means that the stored procedure cannot return integers, strings, or cursors and must always contain `SELECT` statements. Plus, supported stored procedures must not contain `OUT` or `IN/OUT` parameters, but only `IN` parameters. In addition, `COMPUTE`, `PRINT`, `OUTPUT` or `STATUS` statements contained in stored procedures are .not executed

> ⚠ Caution
>
> These restrictions are not valid for Oracle stored procedures. Refer to next section for learning about .supported Oracle stored procedures

Connection Server supports Oracle stored procedures inside a package. The package name is returned as the .catalog name. This behavior is valid for Oracle CI and JDBC network layers

.For more information about using stored procedures, refer to the *Universe Design Tool User Guide*

Oracle Stored Procedures 4.3.2

:The supported Oracle stored procedures are the following

- Any PL/SQL procedure that returns result sets through a REF Cursor
- PL/SQL stored procedures that have one `IN/OUT` REF cursor variable parameter and no `OUT` parameter

> **i Note**
>
> .The other `IN/OUT` cursor parameters of the procedure are ignored

:The unsupported Oracle stored procedures are the following

- Any PL/SQL procedure that does not return result sets through a REF CURSOR parameter
- Any PL/SQL procedures having at least one `OUT` parameter
- Any PL/SQL function
- Any PL/SQL procedure having one `IN/OUT` parameter of a type different than a REF CURSOR, for example, `VARRAY`
- Any PL/SQL Table function

To access Oracle stored procedures, you must do a number of tasks at the server end to allow the BI platform .to connect to a stored procedure. This is explained in the next sections

To Create a Cursor Inside a Package 4.3.3

In Oracle databases, a package is a database object that contains related PL/SQL types, objects, and subprograms. You must first create a cursor inside a package before creating an Oracle stored procedure using .the defined cursor

:In the Oracle database administration system, use the following statement

```
CREATE or REPLACE PACKAGE catalog_data AS
     TYPE CatCurTyp IS REF CURSOR RETURN
                    ;all_objects%ROWTYPE
                        ;END catalog_data
```

.The BI platform does not support packaged stored procedures, only standalone

To Create an Oracle Stored Procedure 4.3.4

In the following procedure, you use `catcurtyp` cursor that you previously created in the package, and .`catalog_data.catcurtyp`

:Do one of the following

a. :Write the following statement

```
CREATE or REPLACE PROCEDURE get_allobjects(cat_cv IN OUT
                              catalog_data.catcurtyp) AS
                                                   BEGIN
                ;OPEN cat_cv FOR SELECT * FROM all_objects
                                                     ;END
```

:Write the following statement with several parameters .b

```
CREATE or REPLACE PROCEDURE get_ownerobjects(owner_name IN
varchar2, cat_cv IN OUT catalog_data.catcurtyp) AS
BEGIN
OPEN cat_cv FOR SELECT * FROM all_objects WHERE
;owner=owner_name
;END
```

.See your Oracle documentation for more information on how to create packages and stored procedures

SAP HANA Stored Procedures 4.3.5

.Connection Server supports SAP HANA stored procedures through JDBC and ODBC

:You create SAP HANA stored procedures with the following syntax

```
<CREATE PROCEDURE <procedure_name
{<LANGUAGE <lang>} {SQL SECURITY <mode}
READS SQL DATA {WITH RESULT VIEW <view_name>}} AS}
BEGIN
;<select ... from <table_name
END
```

`LANGUAGE`, `SQL SECURITY` and `READS SQL DATA` are not mandatory. The default language is SQLScript. See .the *SAP HANA Database SQLScript Guide* for more information

Example

:Simple stored procedure

```
CREATE PROCEDURE Proc
LANGUAGE SQLSCRIPT READS SQL DATA AS
BEGIN
;select * from CUSTOMER
END
```

:Stored procedure with a parameter and a result view

```
(CREATE PROCEDURE ProcWithResultView(IN id int
LANGUAGE SQLSCRIPT READS SQL DATA WITH RESULT VIEW ProcView AS
BEGIN
;select * from CUSTOMER where CUST_ID = :id
END
```

Teradata Macros 4.3.6

.Connection Server only supports Teradata macros when the connection established uses ODBC

⚠ Caution

It does not support Teradata stored procedures in ODBC, because stored procedures do not return any .result sets. It also does not support macros and stored procedures in JDBC

:You create Teradata macros with the following syntax

```
;(;<create macro <macro_name> as (select * from <table_name
```

.See the Teradata documentation for more information

✤ Example

:Simple macro

```
;(;'create macro GUEST95 as (select * from guest where TYear='FY95
```

:Macro with a parameter

```
create macro MGUESTIN (inyear VARCHAR(12)) as (select * from GUEST where
;(;TYear=:inyear
```

:Macro with multiple result sets

```
create macro MGUEST as
)
;'select * from guest where TYear='FY95
;select count(*) from guest
;(
```

Connection Pools 4.4

A driver opens a connection to the database in order to access data. The following are two methods that you :can use to connect to a database

- Each time that Connection Server requires information, the data access driver opens a connection to the .database, retrieves the data, then closes the connection
- Connection Server keep available connections open and maintain their details in a connection pool. Each time that Connection Server requires information from the data source, the data access driver checks the connection pool to see if it contains an unused, suitable connection. If an existing connection is available, the connection is used. If all connections are being used, Connection Server creates a new connection and .adds it to the pool. This method uses system resources more efficiently

→ Remember

.Connection Server does not add a connection that uses single sign-on to the pool

About Connections of the Pool 4.4.1

.Connections that are available in the connection pool can be exclusive or shareable

- Exclusive connections can be allocated to one user only at a time. When an exclusive connection is allocated, it is no longer available in the pool. Then it cannot be allocated to any other requesters. When the .connection is no longer required, the custom driver releases the connection so that it can be reallocated
- Shareable connections can be allocated to multiple users at a time. When a connection is allocated, the .connection remains in the pool so that it is available for other requesters

You can choose to create an exclusive or shareable connection with the *Connection Pool Mode* parameter of the .connection wizard

Related Information

[210 Connection Shareable [page
[213 Shared Connection [page
[163 Max Pool Time [page

Connection Pool Mode 4.4.2

Connection Pool Mode Description	Connection Pool Mode Value
Disconnects from the database after a query is completed. .The next time a query is run, the connection is re-created	*Disconnect after each transaction*
This is the connection pooling option. If a query is completed before the time specified in *Pool Timeout* (10 minutes is the default), then the connection can be re-used. .All the users share the connection	*Keep the connection active for*
The connection is closed when the user exits the application. This option does not use the connection .pooling	*Keep the connection active during the whole session (local (mode only*

Choosing the Connection Pool Mode

.The connection pool mode may depend on the availability of your marchine resources

- .If the memory is low, then choose the *Disconnect after each transaction* option

- If the memory is high and the performance is critical, then choose the *Keep the connection active during the whole session (local mode only)* option.
- To control the behavior more precisely, choose the *Keep the connection active for* option.

Checking Middleware Connection Pooling 4.4.3

Data source middleware often provide their own connection pool mechanism. You must make sure the middleware connection pool setting is compatible with the one set in the design tool to obtain the connection performance that you expect.

Load Balancing 4.5

In server mode, you can run several Connection Server instances on the BI platform. Connection Server implements a load-balancing mechanism in this deployment mode. It chooses the best server in terms of resources that can support new client requests.

Load balancing helps to address scalability issues by increasing the number of server instances on the BI platform.

> ⚠ Caution
>
> This load-balancing mechanism is different from the load balancing implemented by the Central Management Server.

Load balancing is performed at the following levels:

- Client proxies in a 2-tier deployment, on the client tier
- Server bridges in a web tier deployment, on the web tier

Connection Server also provides an application-level lookup mechanism, which helps it to choose the right server instance for a job. Connection Server binds the client to the appropriate server, depending on the type of data source requested by the client and on what network layer and database pair the server supports.

> → Remember
>
> Load balancing is performed after the lookup. It is available on all platforms.

Finding the Best Server 4.5.1

Connection Server scalability issues may come from the following:

- The number of opened database connections
  Issues dealing with the number of database connections are already handled by the connection pool .mechanism
- The CPU used by Connection Server
  Connection Server may use a noticeable amount of CPU when converting data or when writing and sending back big response buffers to the client. However, Connection Server is not an intensive CPU .consumer
- The number of jobs running
  .The number of jobs that run on a server increases its workload
- The amount of memory allocated by either Connection Server or the middleware it embeds
  The amount of memory used depends on the SQL queries executed. For example, a single SQL statement .against a large table may have a bigger impact on scalability than a series of small SQL queries

Connection Server implements load balancing with the help of the most relevant indicator of server workload, which is in this case the amount of allocated memory. The less memory a Connection Server server uses, the .healthier it is

> **i Note**
>
> .Connection Server may also use the number of jobs as health indicator in future releases

:The following formula calculates the HEALTH of the server

```
HEALTH = (available memory / max memory) * constant
```

:where

- `max memory` is the maximum amount of allocatable memory, for example 2GB on a 32-bit Microsoft Windows platform
- `available memory` is the difference between `max memory` and the current amount of allocated memory
- .(`constant` is the maximum HEALTH (set to `10000` for Connection Server

Load Balancing Logic 4.5.2

1. .Each candidate server reports its HEALTH to the load balancer
   A candidate server is a Connection Server server that supports the requested network layer and database pair. Assuming that all the server instances support the same set of data sources, they are all potential .candidates for serving a client request
2. The load balancer determines which server to send the client request to by identifying and ranking the healthiest servers. It then identifies the best server among those. If the set of servers only contains one .server, then this is the target server

The HEALTH is updated during the lifecycle of the server. HEALTH is recalculated when one of the following :operations is performed

- A job is created or destroyed
- A job is prepared or executed
- A data fetch operation is performed

Backward Compatibility 4.5.3

The load-balancing mechanism is supported on all platforms starting from the SAP BusinessObjects Business Intelligence platform 4.0 Feature Pack 3 release. In the case of incremental deployments or limited upgrades on previous releases, backward compatibility is supported. Any server which fails to report its HEALTH to the load .balancer is considered as healthy, that is, at its maximum health

> **i Note**
>
> Load balancing is also available for some platforms in some Service Packs of previous releases. Contact .your SAP representative for more information

Memory Allocation 4.6

The Native Connectivity Service can use the HOARD memory-allocation functionality on 64-bit Microsoft Windows. HOARD is a scalable and optimized memory allocator for C++ components that allows the service to .have better performance, better scalability, and less memory fragmentation

:The Data Access layer provides the following binaries

- `ConnectionServer.exe`, which is the default binary. HOARD is not enabled.
- `ConnectionServerOptimized.exe`, which is the HOARD-enabled binary

To Enable HOARD 4.6.1

1. .Open the CMC
2. .Under *Connectivity Services*, stop the Native Connectivity Service hosted by the ConnectionServer server
3. .Locate the Connection Server executable
   .It is located in the `<bip-install-dir>\win64_x64` directory
4. .Make a backup copy of the `ConnectionServer.exe` file
5. .Rename `ConnectionServerOptimized.exe` to `ConnectionServer.exe`
6. .Restart the service

.You have enabled HOARD in the Native Connectivity Service

To Disable HOARD 4.6.2

.Open the CMC .1

.Under *Connectivity Services*, stop the Native Connectivity Service hosted by the ConnectionServer server .2

.Restore the default `ConnectionServer.exe` file .3

.Restart the service from the CMC .4

.You have disabled HOARD in the Native Connectivity Service

Activity in CA Wily Introscope Workstation 4.7

Workflow activity involving Connection Server is traced in CA Wily Introscope workstation. Connection Server :functions can be analyzed through the different views proposed by the tool, which are the following

- Dashboard and summary view for overall information
- Trace view, where errors are highlighted and described by messages
- Tree view, where successive function calls of a specific workflow are displayed and time spent on a function is highlighted to track the time-consuming activities easily

.For more information, see the *SAP BusinessObjects Business Intelligence platform Administrator Guide*

Related Information

[146 To Configure the Java Virtual Machine for Instrumentation with SAP HANA Connections [page

Creating a Connection 5

Connection Requirements 5.1

.This section covers the requirements for creating a connection

- .Ensure that your platform conforms to the platforms supported for SAP connections
- Ensure that the database middleware is installed correctly, and that you can access your database through .either your computer or a server
- Ensure that you have all the information necessary to access your database, for example the database .login name and password
- .Install the SAP BusinessObjects solution that you will use, including the appropriate data access driver
- .Check that all of the services have started successfully
- Refer to the Readme notice that comes with your SAP BusinessObjects solution to check for any .configuration changes that your environment and software might require
- Refer to the current Data Access release notice to check for any configuration changes that could affect .your environment

> **i Note**
>
> You can use the `cscheck` tool to check your infrastructure and determine if it is suitable for use with SAP .BusinessObjects applications

Related Information

[40 Checking Connection Configuration [page

Checking Connection Configuration 5.2

The Connection Server software includes a command line utility that you can use to check your data source connection infrastructure. You can use the `cscheck` tool to check your client middleware and the installed data .access drivers at any time

> **i Note**
>
> .The results of all checks apply to your local machine, from which you run the tool

The `cscheck` tool is installed in the `<boe-install-dir>\<platform_dir>` where `<boe-install-dir>` is .the BOE installation directory and `<platform_dir>` is `win32x_86`, `win64_x64`, and so on

You run the `cscheck` tool from a command console (DOS or shell). The output is displayed on the screen. You .can specify that the output is generated as XML format, or you can suppress output, to use the tool in a script

:The `cscheck` tool can perform the following functions on your local machine

- Return details of all the connectivities, that is network layers and databases, that the installation can support
- Return details of the data access drivers installed on your local machine
- Return details of the connectivities installed on your local machine
- Check for a valid middleware installation for a supplied network layer and database client
- Check for a valid data access driver installation for a supplied network layer and database client
- Check if a connection can be esbablished to a given database

Related Information

[42 Check Tool—Function Overview [page

Displaying Help on the cscheck Tool 5.2.1

:The `cscheck` tool provides functionality to do the following

- Display general help on the `cscheck` utility
- Display help on each available `cscheck` function

.The help can be displayed in any language selected when you installed your SAP BusinessObjects solution

:To display general help on `cscheck`, use the following syntax

```
{ --language|l { language --help|h cscheck
```

Command help syntax

To display help on a function, use the following syntax, where `<functionName>` is the name of the function for :which you want help, and `<language>` is the language in which to display the help

```
{ --language|l { language{ --help|h { functionName cscheck
```

Function help syntax

Example

:To display help in English on the `cscheck` tool, use the following command

```
cscheck --help
```

:To display help in French on the `connectivity` function, use the following command

```
cscheck --language fr --help connectivity
```

To Run the cscheck Tool 5.2.2

.You can run the cscheck tool at any time after you have installed your SAP BusinessObjects solution

1. .Open a command console
2. .Change directory to the path where the tool is installed
3. .Enter `cscheck` with the correct parameters to find the information that you want
4. .Review the returned information

Related Information

[42 Check Tool—Function Overview [page

Check Tool—Function Overview 5.2.3

From a command console, you use the `cscheck` command with the appropriate function and its arguments to .return the results that you want

.`cscheck` commands have the following structure. Some of the parameters are optional

`cscheck` { *output language* | `--language` | `l` } { `--xml` | `x` } `--mute` | `m` *function name function options*

cscheck syntax

:The first part of the command controls the output format

- `output language>` or `l` followed by the language specified in ISO639-1 standard. This is optional. The> .default language is English
- `xml` or `x` specifies that the output is in XML format. This is optional. The default output is text displayed-- .on the screen
- `mute` specifies that the output is not generated. You would use this switch if you were using the tool in a-- .script that checked the returned status. This is optional. The default is that output is generated

.The remaining part of the command consists of the function and its option arguments

`function name>` can take the following values. Each function has a short version that you can use in place of> :the full function name

- `list` or `lt`
- `driverssearch` or `ds`
- `find` or `fd`
- `middleware` or `mw`
- `accessdriver` or `ad`
- `connectivity` or `ct`

- `ping` or `pg`

Related Information

[47 Check Tool— accessdriver [page
[48 Check Tool— connectivity [page
[44 Check Tool— driverssearch [page
[45 Check Tool— find [page
[43 Check Tool— list [page
[46 Check Tool— middleware [page
[50 Check Tool— ping [page

Check Tool— list 5.2.4

Syntax

This function returns a list of the supported network layers and database engines. For example you could .use it to determine the correct values to use with other check tool functions

Note

This function returns the full list of supported data access drivers and middleware, including those .that are not necessarily installed on your machine

```
|cscheck |list| |lt
```

list syntax

Example

The following command lists all network layers and database engines supported by the SAP .BusinessObjects solution installed on the current machine

```
cscheck list
```

:The following is an excerpt of the result list

```
Oracle Client
Oracle 10
Oracle 11
Sybase Open Client
Sybase Adaptive Server 15.5
Informix ODBC Driver
Informix Dynamic Server 11
Teradata ODBC Driver
Teradata 12
Teradata 13
Teradata 14
```

```
                                                    ODBC Drivers
                                     Generic ODBC Datasource
                                    Generic ODBC3 Datasource
                                                        ...
```

Related Information

[42 Check Tool—Function Overview [page
[41 Displaying Help on the cscheck Tool [page

Check Tool— driverssearch 5.2.5

Syntax

.This function returns a list of the installed data access drivers

```
|cscheck |driverssearch| |ds
```

driverssearch syntax

Example

.The following command lists all the Connection Server drivers installed on the machine

```
cscheck driverssearch
```

:The following is an excerpt of the result list

```
This access driver is installed: Oracle OCI access driver
                                 Client layer: Oracle Client
                                         :(Database engine(s
                                                  Oracle 10
                                                  Oracle 11
This access driver is installed: Sybase Open Client access driver
                                 Client layer: Sybase Open Client
                                         :(Database engine(s
                                     Sybase Adaptive Server 15.5
     This access driver is installed: Informix ODBC access driver
                                 Client layer: Informix ODBC Driver
                                         :(Database engine(s
                                      Informix Dynamic Server 11
     This access driver is installed: Teradata ODBC access driver
                                 Client layer: Teradata ODBC Driver
                                         :(Database engine(s
                                                Teradata 12
                                                Teradata 13
                                                Teradata 14
                                                        ...
```

Related Information

[42 Check Tool—Function Overview [page
[41 Displaying Help on the cscheck Tool [page

Check Tool— find 5.2.6

Syntax

This function lists the available connectivity types, that is middleware and database clients, that are available from the local machine. This includes:

- connectivity types available on the local machine
- connectivity types available using the CORBA communication layer
- connectivity types available using the HTTP communication layer
- Java connectivity types available on the local machine

find syntax

```
{ cscheck |find| |fd| -m { Connection Server access mode
```

Function input parameters

(Connection Server access mode (-m	The mode in which the client application accesses Connection Server: • `local`: lists connectivity types available on the local machine. • `corba`: lists connectivity types available using CORBA. • `http`: lists connectivity types available using HTTP. • `java`: lists Java connectivity types available on the local machine. • `extended`: lists local, java, and CORBA connectivity types.

Example

Finding local connectivities

The following command returns a list of the data access drivers on the local machine that can be loaded by Connection Server.

```
cscheck find -m local
```

The following is an excerpt of the result list:

```
Local Library Mode
   IBM DB2 Client
  DB2 10 for LUW
```

```
                                                    DB2 10 for z/OS
                                                       DB2 for i v6
                                                       DB2 for i v7
                                                    DB2 for z/OS v9
                                          DB2 UDB for iSeries v5
                                                            DB2 v9
                                                    Essbase Provider
                                                Hyperion Essbase 7
                                                Hyperion Essbase 9
                                               Informix ODBC Driver
                                   Informix Dynamic Server 11
                                                   ODBC Drivers
                                      Generic ODBC datasource
                                     Generic ODBC3 datasource
                                           MS SQL Server 2008
                                           MS SQL Server 2012
                                        Sybase SQL Anywhere 10
                                                            ...
```

Example

Finding CORBA server connectivities

.The following command returns a list of the data access drivers available from a CORBA server

```
cscheck find -m corba
```

Related Information

[42 Check Tool—Function Overview [page

[41 Displaying Help on the cscheck Tool [page

[51 Check Tool—CMS Information [page

Check Tool— middleware 5.2.7

Syntax

For a supplied network layer and database client, this function checks for a valid installation of the client middleware. To check both the middleware and data access driver for a supplied network layer and .database client, you can use the `connectivity` function

{`cscheck |middleware| |mw| -c` {*network layer*} `-d` {*database client*

middleware syntax

Function input parameters

(network layer (-c	The network layer that the database middleware uses, as .returned by the `find` function

.The database to check, as returned by the `find` function	(database client (-d

✤ Example

The following command checks for a valid installation of the Oracle Client 10g middleware on the local machine. It creates an XML file of the output: `c:\result.xml`

```
cscheck --xml middleware -c "Oracle Client" -d "Oracle 9" > c:\result.xml
```

:If the middleware is not correctly installed, the result will be the following

```
...Starting to check the middleware component installation
...Begin AND operator
.ORACLE_HOME... The environment setting does not exist
.End AND operator: failure
.The middleware is not correctly installed
```

Related Information

[42 Check Tool—Function Overview [page

[41 Displaying Help on the cscheck Tool [page

[48 Check Tool— connectivity [page

[47 Check Tool— accessdriver [page

Check Tool— accessdriver 5.2.8

Syntax

For a supplied network layer and database client, this function checks for a valid data access driver installation. To check both the middleware and data access driver for a supplied network layer and .database client, you can use the `connectivity` function

{ `cscheck` |`accessdriver`| |`ad`| `-c` { *network layer* } `-d` { *database client*

accessdriver syntax

Function input parameters

(network layer (-c	The network layer that the database middleware uses, as .returned by the `find` function
(database client (-d	.The database to check, as returned by the `find` function

Example

The following command checks for a valid installation of an Oracle 10 data access driver, and displays the output in French:

```
"cscheck -l fr accessdriver -c "Oracle Client" -d "Oracle 10
```

If the French language is not installed, the result will be the following:

```
The language specified is not installed. Please use an installed language.
.([English ([en
```

Example

The following command checks for a valid installation of an Oracle 10 data access driver:

```
"cscheck ad -c "Oracle Client" -d "Oracle 10
```

The result is the following:

```
...Starting to check the access driver component installation
...Begin AND operator
.Config Directory... success
.SharedRoot%\ConnectionServer\Network Layers\Oracle OCI... success%
.Directory... success
.connectionserver-install-dir>/connectionServer//oracle... success>/
.Library... success
connectionserver-install-dir>/connectionServer//libdbd_oci10.so... >/
.success
connectionserver-install-dir>/connectionServer//libdbd_oci11.so... >/
.success
.Data File Name... success
connectionserver-install-di>/connectionServer//oracle/oracle.sbo... >/
.success
.End AND operator: success
.The access driver is installed
```

Related Information

[42 Check Tool—Function Overview [page

[41 Displaying Help on the cscheck Tool [page

[43 Check Tool— list [page

Check Tool— connectivity 5.2.9

Syntax

For the supplied network layer and database client, this function checks that both the installed middleware and the data access driver are valid.

You can check each individually using the `middleware` and the `accessdriver` functions. You can use the `ping` function to check if you can connect to a specific database.

connectivity syntax

{ `cscheck` |`connectivity`| |`ct`| `-c` { *network layer* } `-d` { *database client*

Function input parameters	
(network layer (-c	The network layer that the database middleware uses, as returned by the `find` function.
(database client (-d	The database to check, as returned by the `find` function.

Example

The following command checks the installed Oracle client middleware, and the Oracle 10 data access driver. The command writes the output to a text file: `c:\result.txt`.

```
cscheck -l en connectivity -c "Oracle Client" -d "Oracle 10">c:\result.txt
```

If the middleware is not correctly installed, the result will be the following:

```
...Starting to check the middleware component installation
...Begin AND operator
.ORACLE_HOME... The environment setting does not exist
.End AND operator: failure
.The middleware is not correctly installed
...Starting to check the access driver component installation
...Begin AND operator
.Config Directory... success
.SharedRoot%\ConnectionServer\Network Layers\Oracle OCI... success%
.Directory... success
.connectionserver-install-dir>/connectionServer//oracle... success>/
.Library... success
connectionserver-install-dir>/connectionServer//libdbd_oci10.so... >/
.success
connectionserver-install-dir>/connectionServer//libdbd_oci11.so... >/
.success
.Data File Name... success
connectionserver-install-dir>/connectionServer//oracle/oracle.sbo... >/
.success
.End AND operator: success
.The access driver is installed
```

Related Information

[42 Check Tool—Function Overview [page

[41 Displaying Help on the cscheck Tool [page

[45 Check Tool— find [page

[47 Check Tool— accessdriver [page

[46 Check Tool— middleware [page

[50 Check Tool— ping [page

Check Tool— ping 5.2.10

Syntax

.This function attempts to access a given database using the supplied details

`cscheck ping|pg| -m` { *Connection Server access mode* } `-c` { *network layer* } `-d` { *database client* } { `-u` { *user name* } `-p` { *password* } `-s` { *data source* } `-t` { *database* } `-r` { *host name* } `-j` { *PID*

ping syntax

Function input parameters

< (Connection Server access mode < (-m	The mode in which the client application accesses :Connection Server • `local`: Connection Server is running on the local .machine • `corba`: Connection Server is running on a CORBA .server • `http`: Connection Server is running on a HTTP .server • `java`: Connection Server uses a Java data access .driver on the local machine
(network layer (-c	The database middleware for the connection to check, as .returned by the `find` function
(database client (-d	.The database type, as returned by the `find` function
(user name (-u	.A valid user name for the database
(password (-p	.The password for the user name
(data source (-s	.The server on which the database is running
(database (-t	.The database server
(host name (-r	For CORBA mode, the computer hosting Connection .Server
(PID (-i	For CORBA mode, the process number of the Connection .Server to ping through

Example

Pinging an Oracle database

:The following command checks access for

- .Connection Server access mode: `local`, that is, the database runs on the local machine
- Network layer: `Oracle Client`

- Database: `Oracle 10g`
- Data source: `Harlaxton`
- User name: `efashion`
- Password: `X2345`

```
cscheck ping -m local -c "Oracle Client" -d "Oracle 10" -u "efashion" -p "X2345"
"-s "Harlaxton
```

Example

Pinging a Sybase database using CORBA

:The following command checks access for

- .Connection Server access mode: `CORBA`, that is, Connection Server runs on a CORBA server
- Network layer: `Sybase`
- User name: `syadmin`
- Password: `password`
- Data source: `Sybase Adaptive Server 15`
- Database: `SY1`
- Database host: `sybasehost`
- Process ID: `456`

```
cscheck ping -m corba -c "Sybase Open Client" -d syb15 -u "syadmin" -p
"password" -s "Sybase Adaptive Server 15.5" -t "SY1" -r "sybasehost" -i 456
```

Related Information

[42 Check Tool—Function Overview [page

[45 Check Tool— find [page

[51 Check Tool—CMS Information [page

Check Tool—CMS Information 5.2.11

Syntax

The following parameters allow you to specify the CMS information that you can use with the `find` or .`ping` function of the `cscheck` tool

--{ `--ce_pass` {*Password*{ `--ce_user` {*User name*{ `--ce_cluster` {*CMS server* `cscheck` `ce_auth` {*Authentication*} `find -m corba`

CMS syntax

Function Input Parameters	
(CMS server (--ce_cluster	.The host and port to access the CMS
(User name (--ce_user	.The user name to access the CMS
(Password (--ce_pass	.The password to access the CMS
(Authentication (--ce_auth	The method used to authenticate the user's login .credentials when accessing the CMS

Example

The following command returns a list of connections that are stored on the CMS and available using .CORBA

```
cscheck --ce_cluster localhost --ce_user Administrator --ce_pass Password1 --
ce_auth SecEnterprise find -m corba
```

Remember

The parameters must be placed before the `find` or `ping` function in the command line. They all are .mandatory

Related Information

[45 Check Tool— find [page
[50 Check Tool— ping [page

Creating JDBC Connections 5.3

A set of data access drivers are installed when you install the BI platform. You can use these data access drivers to create connections to databases. They are located in the `<connectionserver-install-dir>` .`\connectionServer\drivers\java` directory

Note

JDBC connectivity is available for SAP BusinessObjects Enterprise XI 3.0 and higher. Web Intelligence Rich Client supports JDBC connectivity in 3-tier mode in the SAP BusinessObjects Business Intelligence .platform 4.0 and higher

SAP BusinessObjects software also includes configuration files for using JDBC drivers to access your :databases. To use these drivers, you do the following

.1 .Obtain the java driver software from your database supplier

2. Specify JAR file paths by one of the following ways:
   - Set the `ClassPath` element in the SBO configuration file of the data access driver with the fully qualified path of the JAR file.
   - Store JAR files into directories you create from the `Extensions` parameter values of the SBO file.

You can use simultaneously these two ways of specifying JAR file paths. However, JAR files specified in the SBO file take precedence over JAR files stored in your own directories.

> **i Note**
>
> SAP Visual Intelligence allows users to select JAR files directly from the connection creation box of the application. See *SAP Visual Intelligence User Guide* for information.

For an up-to-date list of supported JDBC drivers, check the SAP Service Marketplace at https://support.sap.com/, or contact your SAP representative.

> **i Note**
>
> The Data Access layer provides the Generic JDBC connectivity to create a connection to a data source that the BI platform does not support explicitly.

Related Information

[53 To Create a JDBC Connection with the SBO File [page

[55 To Create a JDBC Connection with Extensions [page

[55 To Create a Generic JDBC Connection [page

[184 JDBC Driver Properties [page

To Create a JDBC Connection with the SBO File 5.3.1

- Obtain the necessary JDBC driver software for the database, and copy the files to your system. These files are available from the database vendor. The driver software consists typically of one or more `.jar` files. Note the installation path details for these files.
- Ensure that you have the database access details to hand, for example the login and password details.

1. Navigate to the directory that contains the SBO file you want to use.

   For example, on Microsoft Windows, the JDBC configuration files are located in the `<connectionserver-install-dir>\connectionServer\jdbc` directory.
2. Use an XML editor to open the SBO file for editing.
3. Add the required `.jar` file details to the `ClassPath` area. Include the fully qualified path names when specifying these files, for example:

```
<Path>C:\\JDBC Drivers\\MSSQLSERVER2008\\msutil.jar</Path>
```

> **i Note**
>
> These files need to be installed on the machine running the application. Make sure the JDBC driver .path is correct

.4 Locate the `Driver Capabilities` parameter, and check that it is set to either `Procedure`, `Queries`, or .both

> **i Note**
>
> .In the last case, settings are separated by a comma

> **⚠ Caution**
>
> .If it is not set to one of these values, the JDBC driver is unavailable from the connection wizard

.5 .Save and close the SBO file

.6 .Run the connection wizard

.The JDBC driver that you have configured appears in the list of available connections

.7 .Select the JDBC driver and use the wizard to configure the connection

.When you complete this task, the connection is available for use

Related Information

[40 Connection Requirements [page
[178 Data Access Configuration Files [page

JDBC SBO Example File Structure 5.3.2

This shows an example of the section of the `sqlsrv.sbo` file that you need to modify. This SBO file is for .Microsoft SQL Server 2008

```
<"DataBase Active="Yes" Name="MS SQL Server 2008>
...
<JDBCDriver>
<ClassPath>
<Path>C:\\JDBC Drivers\\MSSQLSERVER2008\\msbase.jar</Path>
<Path>C:\JDBC Drivers\MSSQLSERVER2008\\msutil.jar</Path>
<Path>C:\\JDBC Drivers\\MSSQLSERVER2008\\mssqlserver.jar</Path>
<ClassPath/>
...
<JDBCDriver/>
...
<DataBase/>
```

To Create a JDBC Connection with Extensions 5.3.3

- Obtain the necessary JDBC driver software for the database, and copy the files to your system. These files .are available from the database vendor. The driver software consists typically of one or more JAR files
- .Ensure that you have the database access details to hand, for example the login and password details

1. .Go to the next section of the guide to find the `Extensions` parameter values
2. .Use one or more of the `Extensions` parameter values to create your own driver directories
   For example, `Extensions` parameter values for Microsoft SQL Server 2008 middleware are `sqlsrv2008`, :`sqlsrv` and `jdbc` in the `sqlsrv.sbo` file. You can create any of the following directories
   - `connectionserver-install-dir>\connectionServer\jdbc\drivers\sqlsrv2008>`
   - `connectionserver-install-dir>\connectionServer\jdbc\drivers\sqlsrv>`
   - `connectionserver-install-dir> \connectionServer\jdbc\drivers\jdbc>`
3. .Copy the JAR files into the directories of your choice
4. .Run the connection wizard
   .The JDBC driver that you have configured appears in the list of available connections
5. .Select the JDBC driver and use the wizard to configure the connection

To load JDBC drivers, Connection Server searches for JAR files in each directory from the most specific to the .least specific until it finds them. The connection is then available for use

Example

For example, if you store JAR files in `<connectionserver-install-dir>\connectionServer\jdbc\drivers\sqlsrv` only, then Connection Server first searches for drivers in `sqlsrv2008` directory, finds .it empty, then it searches in `sqlsrv` directory, finds the JAR files and loads the driver

Note

Because `sqlsrv` is `Extensions` value of all Microsoft SQL Server target databases, JAR files .specified in this directory are loaded for all Microsoft SQL Server databases

Related Information

[53 To Create a JDBC Connection with the SBO File [page
[178 Data Access Configuration Files [page

To Create a Generic JDBC Connection 5.3.4

- Obtain the necessary JDBC driver software for the database. The `.jar` file needs to be installed on the .machine running the SAP BusinessObjects application

- .Ensure that you have the database access details ready, for example the login and password details

1. .Navigate to the directory that contains the `jdbc.sbo` and `jdbc.prm` files

   For example, on Microsoft Windows, the configuration files are located in the `<connectionserver-install-dir>\connectionServer\jdbc` .directory

2. Copy the required `.jar` file to the `<connectionserver-install-dir>\connectionServer\jdbc` .`\drivers\jdbc` directory

   .You have to create the directory if it does not exist

3. .Run the connection wizard

   .The JDBC driver appears in the list of available connections under Generic

4. :Select the JDBC driver and use the wizard to configure the connection with the following details
   - JDBC URL
   - JDBC class
   - user name
   - password

.When you complete this task, the connection to the data source is available for use through JDBC

> **i Note**
>
> The `jdbc.prm` file only contains information about generic functions of a JDBC database. You can add or update any information specific to a custom database in the file. The modifications to `jdbc.prm` file apply .to all generic JDBC connections that are created or to be created

Related Information

[178 Data Access Configuration Files [page
[225 About PRM Files [page

JAR File Location Reference 5.3.5

:Syntax

The following table describes the names of the folders where you must place middleware JAR files to enable JDBC connections. The first column lists the database vendor names as shown in the connection wizard. The second column lists the names of the databases that support JDBC connections, as described in the `DataBase` section of the corresponding SBO file. The third column lists the names of the folders you can .create, as described by the `Extensions` parameter values of the SBO file

The `Extensions` parameter is a child element of the `DataBase` element that corresponds to the targeted database middleware in SBO files. If it is not under `DataBase`, it means the parameter value is valid for all middleware configured in the SBO file. Then refer to the `Defaults` section of the file. On Microsoft Windows, JDBC configuration files are located in the `<connectionserver-install-dir>\connectionServer` .`\jdbc` directory

> **i Note**
>
> The Data Federator JDBC drivers are installed as part of the BI platform in the `<connectionserver-install-dir>\connectionServer\jdbc\drivers\datafederator` directory. The SAP HANA 1.0 SPS 08 JDBC drivers are installed in the `<connectionserver-install-dir>\connectionServer\jdbc\drivers\newdb` directory. Consequently, you do not require to perform any additional .configuration to create a connection to either Data Federator XI 3.0 Query Server or SAP HANA database

Extensions Parameter Values	Database	Vendor
derby10, derby, jdbc	Derby 10 Embedded	Apache
apache, hive, hive07, jdbc	Apache Hadoop Hive 0.7	
apache, hive, hive08, jdbc	Apache Hadoop Hive 0.8	
apache, hive, hive09, jdbc	Apache Hadoop Hive 0.9	
apache, hive, hive010, jdbc	Apache Hadoop Hive 0.10	
apache, hive, hive012, jdbc	Apache Hadoop Hive 0.12	
hive012simba4server1,apache,hive,jdbc	Apache Hadoop Hive 0.12 Simba JDBC4 HiveServer1	
hive012simba4server1,simbahive2,apache,jdbc	Apache Hadoop Hive 0.13 Simba JDBC4 HiveServer2	
cloudera,impala,impala10simba4,jdbc	Cloudera Impala 1.0 Simba JDBC4	
amazon, hive, emrhive07, jdbc	Amazon EMR Hive 0.7	
amazon, hive, emrhive08, jdbc	Amazon EMR Hive 0.8	
hive012simba4server1,amazon,hive,jdbc	Amazon EMR Hive 0.11 Simba JDBC4	
postgresql9, postgresql, jdbc	GreenPlum4	Greenplum
neoview, jdbc	HP Neoview	Hewlett Packard
vertica, jdbc	HP Vertica 6.1	
hsqldb18, hsqldb, jdbc	HSQLDB 1.8 Embedded	HSQLDB
db2v9, db2udb, db2, jdbc	DB2 v9	IBM
db2mvs10, db2mvs, db2, jdbc	DB2 10 for z/OS	
db2mvs11, db2mvs, db2, jdbc	DB2 v11 for z/OS	
db2v10, db2udb, db2, jdbc	DB2 10 for LUW	
db2v10_5, db2udb, db2, jdbc	DB2 10.5 for LUW	

Extensions Parameter Values	Database	Vendor
ids11, informix, jdbc	Informix Dynamic Server 11	
ingres9, ingres, jdbc	Ingres Database 9	Ingres
ingres10, ingres, jdbc	Ingres Database 10	
sqlsrv2008, sqlsrv, jdbc	Microsoft SQL Server 2008	Microsoft
sqlsrv2012, sqlsrv, jdbc	Microsoft SQL Server 2012	
sqlsrv2014, sqlsrv, jdbc	Microsoft SQL Server 2014	
netezza4, netezza, jdbc	Netezza Server 4	Netezza
netezza5, netezza, jdbc	Netezza Server 5	
netezza6, netezza, jdbc	Netezza Server 6	
netezza7, netezza, jdbc	Netezza Server 7	
mysql5, mysql, jdbc	MySQL 5	Oracle
oracle10, oracle, jdbc	Oracle 10	
oracle11, oracle, jdbc	Oracle 11	
oracle12, oracle, jdbc	Oracle 12	
oracleexadata, oracle11, oracle, jdbc	Oracle Exadata	
datafederator3, datafederator, jdbc	Data Federator XI R3	SAP
datafederator4, datafederator, jdbc	Data Federator XI R4	
maxdb7.7, maxdb, jdbc	MaxDB 7.7	
newdb, jdbc	SAP HANA database 1.0	
sybase15, sybase, jdbc	Sybase Adaptive Server Enterprise 15.5	Sybase
sybase16, sybase, jdbc	Sybase Adaptive Server Enterprise 16	
iq15, asiq, jdbc	Sybase IQ 15	
iq16, asiq, jdbc	Sybase IQ 16	
ssa11, ssa, jdbc	Sybase SQL Anywhere 11	
ssa12, ssa, jdbc	Sybase SQL Anywhere 12	
ssa16, ssa, jdbc	Sybase SQL Anywhere 16	

Extensions Parameter Values	Database	Vendor
teradata12, teradata, jdbc	Teradata 12	Teradata
teradata13, teradata, jdbc	Teradata 13	
teradata14, teradata, jdbc	Teradata 14	
teradata15, teradata, jdbc	Teradata 15	
postgresql8, postgresql, jdbc	PostgreSQL 8	PostgreSQL
postgresql9, postgresql, jdbc	PostgreSQL 9	
progress10, progress, jdbc	Progress OpenEdge 10	Progress
progress11, progress, jdbc	Progress OpenEdge 11	

Related Information

[140 SAP HANA Connections [page
[152 About Data Federator XI 3.0 Query Server Connections [page

To Find the Version of a JDBC Driver 5.3.6

.This section describes how to find the version of the driver in your JDBC connection

You can find the version of the JDBC driver used in the `META-INF/MANIFEST.MF` file contained in the driver .JAR file

:Do one of the following

Option	Description
To extract the file by using WinRAR	.1 .Launch the WinRAR application .2 .Drag the JAR file and drop it into the application window .3 .Expand the *META-INF* folder .4 .Drag the `MANIFEST.MF` file from WinRAR and drop it into a local folder .5 .Open the file and locate the `Bundle-Version` value
To extract the file from a command prompt	.1 .Open a command prompt .2 :Go to the folder where you should extract the file `<cd <driver_path`

Description	Option

.3 Run the following command:
`JAR_path>\jar.exe -xf <driver_path>\<driver_name>.jar META-> INF/MANIFEST.MF`
.4 Open the file and locate the `Bundle-Version` value.
For example, run the following commands to retrieve the version of the SAP HANA JDBC driver:
`cd C:\Program Files (x86)\SAP BusinessObjects\SAP BusinessObjects Enterprise XI 4.0\dataAccess\connectionServer\jdbc\drivers\newdb C:\Program Files (x86)\SAP BusinessObjects\SAP BusinessObjects " Enterprise XI 4.0\win64_x64\jdk\bin\jar.exe" -xf ngdbc.jar META- INF/MANIFEST.MF`
i Note
Put the path of the JAR file into double quotes if it contains spaces.	

Creating JavaBean Connections 5.4

A data access driver that uses a JavaBean is installed when you install the BI platform. It is located in the `<connectionserver-install-dir>\connectionServer\drivers\java` directory.

Developers can also create JavaBeans that provide access to data sources. You can create connections using these JavaBeans. In order to create a JavaBeans connection, the developers who create the JavaBean will supply the following information:

- The required JAR files
- Any other files that the JavaBean requires
- Any specific configuration details that the JavaBean driver requires

As for JDBC connections, you can also create a JavaBean connection by using the `Extensions` functionality.

> **i Note**
>
> Within a JavaBean driver, data-retrieval procedures are configured as stored procedures. When creating a JavaBean connection from the connection wizard, you must check *Filter Stored Procedures Network Layers* on *Database Middleware Selection* screen. If you do not, the connection wizard does not display the JavaBean drivers that are available.

Related Information

[52 Creating JDBC Connections [page
[61 To Create a JavaBean Connection [page

[62 To Create a JavaBean Connection with Extensions [page

To Create a JavaBean Connection 5.4.1

.Use an XML editor to open the `javabean.sbo` file for editing .1

For example, on Microsoft Windows, the configuration files are located in the `<connectionserver-install-dir>\connectionServer\javabean` directory.

Add the required `.jar` file details to the `ClassPath` area. Include the fully qualified path names when .2 .specifying these files

> **i Note**
>
> .These files need to be installed on the machine running the SAP BusinessObjects application

.Refer to the information on the `javabean.sbo` example file structure for details

.Save and close the file .3

.Perform any other configuration tasks specified by the JavaBeans developer .4

.Run the connection wizard .5

.The JavaBeans data source that you have configured should appear in the list of available connections

.Select the JavaBeans data source and use the wizard to configure the connection .6

.When you complete this task, the connection is available for use with the application

Related Information

[178 Data Access Configuration Files [page

JavaBean SBO Example File Structure 5.4.2

.This section contains an example of a JavaBeans SBO file

```
<"DataBase Active="Yes" Name="Excel Spreadsheet>
<JavaBean>
<ClassPath>
<Path>$ROOT$\\beans\\bean_excel.jar</Path>
<ClassPath/>
Parameter Name="JavaBean Class">com.businessobjects.beans.excel.Excel</>
<Parameter
<Parameter Name="URL Format">$DATASOURCE$</Parameter>
<JavaBean/>
<Parameter Name="Family">Java Beans</Parameter>
<Parameter Name="Description File">bean_excel</Parameter>
```

```
<Parameter Name="Authentication Mode">Bypass</Parameter>
<Parameter Name="Extensions">bean_excel,javabean</Parameter>
<DataBase/>
<DataBases/>
```

To Create a JavaBean Connection with Extensions 5.4.3

1. Navigate to the directory that contains the `javabean.sbo` file.

   For example, on Microsoft Windows, the file is located in the `<connectionserver-install-dir>\connectionServer\javabean` directory.

2. Open the SBO file for viewing.
3. Locate `<Parameter Name="Extensions">` element in the `Defaults` section.

> **i Note**
>
> If you develop a JavaBean driver using the DDK, locate the `Extensions` parameter in the `<DataBase Active="Yes" Name="Excel Spreadsheet">` element.

4. Use one or more of the `Extensions` parameter values to create your own driver directories.

   For example, `Extensions` parameter value is `javabean` in the `Defaults` section of the file. You can then create the `<connectionserver-install-dir>\connectionServer\javabean\drivers\javabean` directory.

5. Copy the JAR files into the directories of your choice.
6. Close the SBO file.
7. Run the connection wizard.

   The JavaBean driver that you have configured appears in the list of available connections.

8. Select the JavaBean driver and use the wizard to configure the connection.

To load JavaBean drivers, Connection Server searches for JAR files in each directory from the most specific to the least specific until it finds them. The connection is then available for use.

Related Information

[61 To Create a JavaBean Connection [page
[178 Data Access Configuration Files [page

Creating ODBC Connections 5.5

A set of data access drivers are installed when you install the BI platform. You can use these data access drivers to create connections to databases. They are located in the `<connectionserver-install-dir>`

`\connectionServer\drivers\lib32` or `<connectionserver-install-dir>\connectionServer\drivers\lib64` directory.

SAP BusinessObjects software also includes configuration files for using ODBC drivers to access your databases. To use these drivers, you do the following:

1. Obtain the ODBC driver software from your database supplier.
2. Modify the supplied configuration files.

Most of ODBC drivers are available in Unicode and non-Unicode.

For an up-to-date list of supported ODBC drivers, check the SAP Service Marketplace at https://support.sap.com/home.html, or contact your SAP representative.

> **Note**
>
> The Data Access layer provides the Generic ODBC connectivity to create a connection to a data source that the BI platform does not support explicitly.

About Generic ODBC Connections on UNIX

The Microsoft Windows operating system comes with a standard ODBC driver manager. In contrast, UNIX does not provide any standard way to manage drivers. SAP BusinessObjects software allows you to use either DataDirect or unixODBC driver managers for generic ODBC connections on UNIX.

Before creating a generic ODBC connection on UNIX for a specific database, you must identify the following:

- The version of the ODBC driver
- If the driver is able to work with DataDirect driver manager or unixODBC

You then modify the supplied configuration files and configure the relevant data source to enable the connection.

Related Information

[63 To Create a Generic ODBC Connection [page
[65 To Create a Generic ODBC3 Connection [page

To Create a Generic ODBC Connection 5.5.1

The following procedure shows how to configure a generic ODBC connection to a database with the following assumptions:

- The driver is ODBC2

- The driver supports the unixODBC driver manager

1. Navigate to the directory that contains the `odbc.sbo` and `odbc.prm` files.

   The configuration files are located in the `<connectionserver-install-dir>/connectionServer/.odbc` directory.

2. Use an XML editor to open the `odbc.sbo` file for editing.
3. Locate the following section:

```
                                                        <DataBases>
                    <"DataBase Active="Yes" Name="Generic ODBC datasource>
                                                        <Libraries>
                                                                ...
                          <Library Platform="Unix">dbd_wddodbc</Library>
                           <Library Platform="Unix">dbd_ddodbc</Library>
                      <--Library Platform="Unix">dbd_wuxodbc</Library--!>
                       <--Library Platform="Unix">dbd_uxodbc</Library--!>
                                                        <Libraries/>
<Parameter Name="Charset Table" Platform="Unix">datadirect</Parameter>
                                                                ...
                                                        <DataBases/>
```

4. Comment out the first two rows for DataDirect and uncomment one of the next two rows. Make sure you put the row you uncomment on top of the section, so that it can be read first. Comment out the `<Parameter Name="CharSet Table" Platform="Unix">` element.

> **i Note**
>
> - `dbd_wddodbc` specifies the DataDirect-based ODBC2 Unicode driver
> - `dbd_ddodbc` specifies the DataDirect-based ODBC2 non-Unicode driver
> - `dbd_wuxodbc` specifies the unixODBC-based ODBC2 Unicode driver
> - `dbd_uxodbc` specifies the unixODBC-based ODBC2 non-Unicode driver

5. Save and close the `odbc.sbo` file.
6. Use an XML editor to open the `odbc.prm` file for editing.
7. Add or update any information specific to the database.

> **i Note**
>
> The `odbc.prm` file may not contain information about specific functions of the database.

8. Save and close the `odbc.prm` file.
9. Install the relevant ODBC drivers on your UNIX machine.
10. Configure the data source by editing the `odbc.ini` file.
11. Save and close the `odbc.ini` file.
12. Run the connection wizard.

    The ODBC driver that you have configured appears in the list of available connections under Generic.

13. Select the ODBC driver and use the wizard to configure the connection.

When you complete this task, the connection to the data source is available for use through generic ODBC with unixODBC driver manager.

Related Information

[178 Data Access Configuration Files [page

To Create a Generic ODBC3 Connection 5.5.2

The following procedure shows how to configure a generic ODBC connection to a database with the following :assumptions

- The driver is ODBC3
- The driver supports the unixODBC driver manager

.Navigate to the directory that contains the `odbc.sbo` and `odbc.prm` files .1

The configuration files are located in the `<connectionserver-install-dir>/connectionServer/` .`odbc` directory

.Use an XML editor to open the `odbc.sbo` file for editing .2

:Locate the following section .3

```
                                                        <DataBases>
                    <"DataBase Active="Yes" Name="Generic ODBC3 datasource>
                                                        <Libraries>
                                                                ...
                          <Library Platform="Unix">dbd_wddodbc3</Library>
                           <Library Platform="Unix">dbd_ddodbc3</Library>
                      <--Library Platform="Unix">dbd_wuxodbc3</Library--!>
                       <--Library Platform="Unix">dbd_uxodbc3</Library--!>
                  <--Library Platform="Unix64">dbd_wux32odbc3</Library--!>
                   <--Library Platform="Unix64">dbd_ux32odbc3</Library--!>
                                                        <Libraries/>
    <Parameter Name="Charset Table" Platform="Unix">datadirect</Parameter>
                                                                ...
                                                        <DataBases/>
```

Comment the first two rows for DataDirect and uncomment one of the next four rows. Make sure you put .4 the row you uncomment on top of the section, so that it can be read first. Comment out the `<Parameter` .`name="CharSet Table" Platform="Unix">` element

> **i Note**
>
> - `dbd_wddodbc3` specifies the DataDirect-based ODBC3 Unicode driver
> - `dbd_ddodbc3` specifies the DataDirect-based ODBC3 non-Unicode driver
> - `dbd_wuxodbc3` specifies the unixODBC-based ODBC3 Unicode driver
> - `dbd_uxodbc3` specifies the unixODBC-based ODBC3 non-Unicode driver
> - `dbd_wux32odbc3` specifies the unixODBC-based ODBC3 Unicode driver with 32-bit API rather (than 64-bit (available only on 64-bit platforms
> - `dbd_ux32odbc3` specifies the unixODBC-based ODBC3 non-Unicode driver with 32-bit API (rather than 64-bit (available only on 64-bit platforms

.Save and close the `odbc.sbo` file .5

.Use an XML editor to open the `odbc.prm` file for editing .6

.Add or update any information specific to the database .7

> **i Note**
>
> .The `odbc.prm` file may not contain information about specific functions of the database

.Save and close the `odbc.prm` file .8

.Install the relevant ODBC drivers on your UNIX machine .9

.Configure the data source by editing the `odbc.ini` file .10

.Save and close the `odbc.ini` file .11

.Run the connection wizard .12

.The ODBC driver that you have configured appears in the list of available connections under Generic

.Select the ODBC driver and use the wizard to configure the connection .13

When you complete this task, the connection to the data source is available for use through ODBC3 with .unixODBC driver manager

Related Information

[178 Data Access Configuration Files [page

Creating Simba JDBC Connections 5.6

A set of data access drivers are installed when you install the BI platform. You can use these data access drivers to create connections to databases. They are located in the `<connectionserver-install-dir>` .`\connectionServer\jdbc\drivers` directory

> **i Note**
>
> .Simba JDBC connectivity is available for SAP BusinessObjects Enterprise XI 4.1 SP06 and higher versions

Simba JDBC SBO Example File Structure 5.6.1

This shows an example of the `amazon.sbo` file section that you need to modify. This sbo file is for Amazon .RedShift

```
<"DataBase Active="Yes" Name="Amazon Redshift>
```

```
                                                                    ...
                                                                <JDBCDriver>
                                                                <ClassPath>
<Path>C:\\JDBC Drivers\\Amazon Redshift\\RedshiftJDBC4.jar</Path>
                                                              <ClassPath/>
                                                                    ...
                                                              <JDBCDriver/>
                                                                    ...
                                                                 <DataBase/>
```

JAR File Location Reference 5.6.2

:Syntax

The following table describes the names of the folder, which are present in `<connectionserver-install-dir>\connectionServer\jdbc\driver` . The first column lists the database vendor names as shown in the connection wizard. The second column lists the names of the databases that support Simba JDBC .connections, as described in the `DataBase` section of the corresponding SBO file

Extension Parameter Values	Database	Vendor
amazonsimba4, amazon, jdbc	Amazon RedShift	Amazon
salesforce, jdbc	Salesforce.com	Salesforce.com

To Find the Version of a Simba JDBC Driver 5.6.3

.This section describes how to find the version of the driver in your Simba JDBC connection

You can find the version of the Simba JDBC driver used in the `META-INF/MANIFEST.MF` file contained in the .driver JAR file

:Do one of the following

Option	Description
To extract the file by using WinRAR	.1 .Launch the WinRAR application .2 .Drag the JAR file and drop it into the application window .3 .Expand the *META-INF* folder .4 .Drag the `MANIFEST.MF` file from WinRAR and drop it into a local folder .5 .Open the file and locate the `Bundle-Version` value
To extract the file from a command prompt	.1 .Open a command prompt

Option	Description

	.2 Go to the folder where you should extract the file:
	`<cd <driver_path`
	.3 Run the following command:
	`JAR_path>\jar.exe -xf <driver_path>\<driver_name>.jar META-> INF/MANIFEST.MF`
	.4 Open the file and locate the `Bundle-Version` value.
	For example, run the following commands to retrieve the version of the driver:
	`cd C:\Program Files (x86)\SAP BusinessObjects\SAP BusinessObjects Enterprise XI 4.0\dataAccess\connectionServer\jdbc\drivers \amazonsimba4 C:\Program Files (x86)\SAP BusinessObjects\SAP BusinessObjects " Enterprise XI 4.0\win64_x64\jdk\bin\jar.exe" -xf RedshiftJDBC4.jar META-INF/MANIFEST.MF`
	i Note
	Put the path of the JAR file into double quotes if it contains spaces.

To Add a New Driver After a Patch Installation 5.7

You need to modify the BI platform installation manually if you want to add a new driver.

You have made a patch installation of this release to the BI platform servers or client tools.

A patch on the BI platform servers or client tools does not install any new feature to the existing installation. It only updates files that are already installed. To benefit from a new driver, you need to install it manually from the latest full installation.

1. In the *Control Panel*, locate the latest full installation program of the BI platform.

> **→ Remember**
>
> You cannot perform the next step on a program update of the platform.

2. Right-click and select *Uninstall/Change*.
3. In the *Application Maintenance* screen of the *SAP BusinessObjects BI platform setup* dialog box, select *Modify* and click *Next*.
4. In the *Select Features* screen, select the desired driver option under *Database Access and Security*.
5. Click *Next* and complete the installation.

You have installed the driver on the platform. You can now create connections to the desired database.

To Set the Locale in a Multiple Data Sources Workflow 5.8

In the designing and reporting tools, queries to BigDecimal columns of a multisource-enabled universe that is using a native connection may return an error (`java.lang.NumberFormatException`). To avoid this problem, add the `Locale` parameter with the appropriate language and country values to the SBO file of the .database driver on the BIP platform server

.The procedure uses the French locales as examples

1. .Stop the Adaptive Connectivity Service
2. .Open the SBO file for editing

   It is located in the `<bip-install-dir>\dataAccess\connectionServer\<connection_type>` .directory, where `<connection_type>` is for example `db2`, `odbc`, `oracle`, or `sybase`

3. :Add one of the following lines under the appropriate `Database` section
   - ```
     <Parameter Name="Locale">fr</Parameter>
     ```
   - ```
     <Parameter Name="Locale">fr_FR</Parameter>
     ```
4. .Save the file
5. .Restart the service and application

.When you complete this task, native connections in a multisource workflow run properly

Data Access Driver Reference 6

Data Access Drivers 6.1

This chapter provides detailed information on some data access drivers, which enable connections to data sources using OData or XML documents, and specific databases like ABAP-based SAP ERP systems. It mainly describes mapping rules between nontrivial data models and the relational model used in the Data Access .layer

.This chapter only relates to connections to be created in the information design tool

Related Information

[70 CSV OpenDriver [page
[76 OData Driver [page
[89 SAP ERP Driver [page
[96 XML Driver [page
[109 Web Service Driver [page

CSV OpenDriver 6.2

The Data Access layer allows the BI platform to connect to Comma-Separated Value (CSV) files through BusinessObjects OpenConnectivity network layer. It provides a data access driver called CSV OpenDriver to .access the CSV files

The connection wizard provides a workflow to enter the necessary information to connect to CSV files. CSV data sources show up under `Text Files` DBMS and `BusinessObjects OpenConnectivity` .NetworkLayer

Backward compatibility

BusinessObjects OpenConnectivity is not compatible between XI 3.x and 4.1. If you want to migrate such .report, first change it to ODBC connectivity as ODBC is only supported

:The following exception occurs if you refresh the reports in 4.1 without changing the connectivity to ODBC

```
Database error: (CS) "Specified network layer is invalid : BO OC". (IES 10901)
                                                                  ((WIS 10901
```

Since JDBC connectivity in 3-tier mode is not supported in XI 3.x releases, BusinessObjects OpenConnectivity .is not recognized as a network layer when the user tries to refresh a document in the 4.1 release

CSV OpenDriver Capabilities 6.2.1

Since text files do not provide any database operations, the data access driver implements the following :querying capabilities

- (Basic operations for SELECT statements (WHERE, ORDER BY, GROUP BY, and AS
- Basic operators within the WHERE clause (=, <>, <, <=, >, >=, BETWEEN, NOT BETWEEN, LIKE, NOT LIKE, (IS NULL, IS NOT NULL, AND, OR
- Use of wildcards ("?") within the WHERE clause
- DISTINCT clause within the SELECT statement
- UNION and UNION ALL

The data access driver also supports the `MIN`, `MAX`, `AVG`, `SUM`, and `COUNT` grouping functions in SELECT .statements

Driver Restrictions

The CSV OpenDriver does not implement any functionality for altering the state of the CSV file, such as INSERT, UPDATE and ALTER. The data access driver also does not support indexes or JOIN operations on CSV .files

Related Information

[117 Local Disk Used as a Cache for Sorting Operations [page

CSV OpenDriver - Table Mapping 6.2.2

.The data access driver exposes CSV files as tables to the information design tool

You can connect to multiple files if the *Filepath or Pattern* parameter of the connection wizard is set to a pattern, for example `report_*.csv`, which is matched by files such as `report_2010-09-22.csv` and .`report_2010-09-21.csv`

→ Remember

You cannot connect to multiples files located on an HTTP server. The HTTP protocol does not support the .use of wildcards in patterns

:The driver applies one of the following processes

- If the *Merge Files into One* parameter is selected in the connection wizard, all CSV files are mapped to one single table. It is assumed they all have the same schema. This is the default behavior of the data access .driver
- .If the parameter is not selected, each CSV file is mapped to a different table

Mapping All Files to One Table

The table name is the name of the pattern, for example `report_*.csv`. The table has an additional column .named `sourcefile`, which contains the name of the source file for each table row

.If you use an SQLDDL file to provide the schema, the table name must also be the pattern

If the files have different column names, the column names of the resulting table are the ones of the first file .analyzed by the driver, knowing that the files are analyzed in alphabetical order

Mapping One File to One Table

.The name of each table corresponds to the file name of its data source

If you use an SQLDDL file to provide the schema, the name of the table in the `CREATE` statement must be the .file name

.Independently of the parameter value, the file path is mapped to the qualifier of the table

Example

Column Names

If the `report_1.csv` file has the `col1`, ..., and `col10` columns, while the `report_2.csv` file has the .`column1`, ..., and `column10` columns, then the columns of the resulting table are `col1`, ..., and `col10`

Example

Qualifier

If `C:\reports\report_1.csv` is the data source, then the qualifier is `C:\reports\` and the table name .is `report_1.csv`

Related Information

[73 CSV File Location [page
[73 CSV Schema Detection [page

CSV File Location 6.2.3

CSV files used as data sources can be either local or remote. For files on remote systems, the HTTP, FTP, and SMB (also known as CIFS) protocols are supported. The present release also supports the HTTPS and FTPS encrypted protocols based on one certificate. CSV files can be located on the Central Management Server .(CMS) of the BI platform

> **i Note**
>
> SMB is the standard file sharing protocol on Microsoft Windows. Since the jCIFS library provides access to the protocol, you must install the jCIFS JAR file in the Connection Server directory, that is `<connectionserver-install-dir>\connectionServer\sharedLibraries\jcifs`. The version ./to install is 1.3.15. It is available at http://jcifs.samba.org

You can set whether the data source is local or remote through the *Location Type* parameter of the connection wizard. If the data source is remote, you must set the protocol used through the *Protocol* parameter of the wizard. The *Protocol* value must match the protocol specified in the *Filepath or Pattern* and *Schema File* .parameter values

> **Example**
>
> CSV File Paths
>
> - `C:\csv\report.csv` or `csv/report.csv` for a local file
> - `http://server:8080/path/report.csv` for a file accessible through HTTP
> - `ftp://server/path/` for files accessible through FTP
> - `smb://server:port/myshare/mydirectory` for files accessible through SMB

CSV Schema Detection 6.2.4

:The Data Access layer provides the following methods for the schema detection of a CSV file

- No detection
- Automatic detection
- Use of a Data Definition Language (DDL) file
- Use of an SQLDDL file

You choose the method to apply to the files using the *Schema Detection* parameter in the connection wizard. You can provide the schema by using schema files (DDL or SQLDDL). This can be helpful for large and complex .files

.Files are analyzed in alphabetical order

> **ℹ Note**
>
> The first lines of a CSV file may contain comments and can be skipped using the *Number of Comment .Lines in the Beginning* parameter in the wizard

No Detection

The data access driver skips comment lines, analyzes the first line, and determines the number of columns, but not the column types. All values are considered as strings, and column size is set to 255 characters, which corresponds to the standard length of the `VARCHAR` data type. A value that exceeds 255 is truncated. The .columns can contain null values

Automatic Detection

> **→ Remember**
>
> .You cannot apply this method to CSV files with fixed-length columns

:The data access driver analyzes well-formed files and obtains the following information

- column names
  In most cases, the first line contains column names. Otherwise, the CSV OpenDriver generates column .<names in the format `column_0`, `column_1`, ..., `column_<n`
- Column types
  The driver finds column types by using predefined patterns and user settings for numerical, date and time datatypes. If a column contains values of different types, the driver then considers column values as .strings
- Column sizes
  The column size depends on its type. For numerical values, the column size is the length of the highest value in the range of the type. For the other values, this is the length of the longest string value found during .the detection

> **⚠ Caution**
>
> .Only *Probe Rows* set to *all* allows the driver to find the longest string

- Column nullability
  .Nullability is true if there is a null value in the column, false if all values are filled

Unless you select all rows, you choose the number of lines the driver has to analyze by setting the *Number of .Probe Rows* parameter in the connection wizard

.See the *Information Design Tool User Guide* for recommendations

Use of DDL Files

.The data access driver first analyzes the DDL file to convert SQL data types into driver data types

:The DDL file follows this pattern

```
;[[(ColumnName[:ColumnType[(Length
```

:For example

```
;(col1:VARCHAR(20
       ;col2:DATE
    ;col3:INTEGER
    ;col4:INTEGER
```

The DDL file can only define one table schema. The driver assigns the same schema to every CSV file used as .data source

Use of SQLDDL Files

.The data access driver first analyzes the SQLDDL file to convert SQL data types into driver data types

:The SQLDDL file follows this pattern

```
) <CREATE TABLE <Filename
*(,ColumnName> <ColumnType> [NOT] NULL>)
  (ColumnName> <ColumnType> [NOT] NULL>)
;(
```

:For example

```
) CREATE TABLE Clients
 ,id INTEGER NOT NULL
  ,name CHAR(20) NULL
      ,date DATE NULL
   ( (PRIMARY KEY (id
```

.The SQLDDL file can define several table schemas. The driver can assign a schema to several tables

.The data access driver analyzes `CREATE` statements and ignores the other ones, if any

If the DDL or SQLDDL file does not define a column type, the driver then considers column values as strings of 255 characters. A value that exceeds 255 is truncated. If the DDL or SQLDDL file provides a type but not its length, the driver then uses standard lengths, such as 10 for integers. Precision and scale are mandatory for .the `DECIMAL` data type

OData Driver 6.3

The Data Access layer allows the BI platform to connect to data sources that use the Open Data (OData) protocol. It provides a data access driver called OData driver to access online data sources on the Internet or intranets. The OData driver supports the OData 2.0 protocol, whose schema is described with the Conceptual .Schema Definition Language (CSDL) 2.0, see https://msdn.microsoft.com/en-us/library/hh878523.aspx

The OData driver allows the BI platform to connect to the OData services that SAP Gateway 2.0 exposes. SAP Gateway 2.0 allows application users to access data from SAP Business Suite systems such as ERP and CRM .through HTTP

The connection wizard provides a workflow to enter the necessary information to connect to OData data sources. OData data sources show up under `Generic OData 2.0` DBMS and `OData Connector` .NetworkLayer

For windows, you can find the driver configuration files in the `<installation-dir>\SAP .BusinessObjects Enterprise XI 4.0\dataAccess\connectionServer\odata` directory

For unix, you can find the driver configuration files in the `<installation-dir>\sap_bobj .\enterprise_xi40\dataAccess\connectionServer\odata` directory

.The `odata.prm` file lists the data access driver capabilities in terms of database operations and functions

OData Driver Capabilities 6.3.1

:The data access driver supports the following querying capabilities

- (Basic database operations (SELECT, WHERE, ORDER BY, structured joins
- Basic filtering operators within the WHERE clause (=, !=, <, <=, >, >=, AND, OR, LIKE, NOT LIKE, (BETWEEN, NOT BETWEEN, IS NULL, IS NOT NULL
- Nested queries within the FROM clause

The data access driver supports the AS, DISTINCT and GROUP BY operations, although they cannot be .expressed in the OData 2.0 protocol. The driver performs these operations internally

! Restriction

:The present version of the OData driver does not support the following capabilities

- UNION and UNION ALL operations
- HAVING clause
- DISTINCT in aggregate functions
- Subqueries in the WHERE clause

Database Functions

The data access driver supports the `AVG`, `MIN`, `MAX`, and `SUM` database functions, although they cannot be expressed in the OData 2.0 protocol. The driver performs these operations internally. The OData 2.0 protocol .only supports the `COUNT` function, which corresponds to the `$count` operator

Related Information

[81 OData Driver - Mapping Keys [page
[87 OData Driver - Nontrivial Behaviors and Restrictions [page
[117 Local Disk Used as a Cache for Sorting Operations [page

OData Service Location 6.3.2

You can connect to OData services through HTTP. The present release also supports the HTTPS encrypted .protocols based on one certificate

> Example
>
> The following links refer to examples of OData services through HTTP and HTTPS and to an example of an .SAP Gateway service

Related Information

/http://services.odata.org/Northwind/Northwind.svc
/https://api.datamarket.azure.com/Data.ashx/data.gov/Crimes
/http://gw.esworkplace.sap.com/sap/opu/odata/sap/SALESORDERS

OData Service Example 6.3.3

An OData data source exposes its data according to a schema based on the Entity Data Model (EDM). The schema is described with the help of CSDL. CSDL is an XML format that describes the structure and semantics .of Entity Data Model schemas

The following examples illustrate the structure of a schema based on CSDL. This schema defines metadata of an OData data source that provides the Northwind service. The service URI is http://services.odata.org/

Northwind/Northwind.svc/. To learn more about the concepts that rule an entity data model, see the CSDL .specification

→ Remember

The present version of OData driver does not support FunctionImports, AnnotationElements, .ReferentialConstraints, and dynamic properties

Example

Northwind Service Schema

.You access the schema from http://services.odata.org/Northwind/Northwind.svc/$metadata

```
<"Schema Namespace ="NorthwindModel>
...
<"EntityType Name="Customer>
<Key>
</"PropertyRef Name="CustomerID>
<Key/>
Property Name="CustomerID" Type="Edm.String" Nullable="false" >
</"MaxLength="5" Unicode="true" FixedLength="true
Property Name="CompanyName" Type="Edm.String" Nullable="false" >
</"MaxLength="40" Unicode="true" FixedLength="false
Property Name="ContactName" Type="Edm.String" Nullable="true" >
</"MaxLength="30" Unicode="true" FixedLength="false
Property Name="ContactTitle" Type="Edm.String" Nullable="true" >
</"MaxLength="30" Unicode="true" FixedLength="false
...
NavigationProperty Name="Orders" >
Relationship="NorthwindModel.FK_Orders_Customers" FromRole="Customers"
</"ToRole="Orders
NavigationProperty Name="CustomerDemographics" >
Relationship="NorthwindModel.CustomerCustomerDemo" FromRole="Customers"
</"ToRole="CustomerDemographics
<EntityType/>

<"Association Name="FK_Orders_Customers>
</"End Role="Customers" Type="NorthwindModel.Customer" Multiplicity="0..1>
</"*"=End Role="Orders" Type="NorthwindModel.Order" Multiplicity>
<ReferentialConstraint>
...
<ReferentialConstraint/>
<Association/>
...
<Schema/>
<"Schema Namespace="ODataWeb.Northwind.Model>
EntityContainer Name="NorthwindEntities" p7:LazyLoadingEnabled="true" >
<"m:IsDefaultEntityContainer="true
...
</"EntitySet Name="Customers" EntityType="NorthwindModel.Customer>
</"EntitySet Name="Employees" EntityType="NorthwindModel.Employee>
</"EntitySet Name="Order_Details" EntityType="NorthwindModel.Order_Detail>
</"EntitySet Name="Orders" EntityType="NorthwindModel.Order>
</"EntitySet Name="Products" EntityType="NorthwindModel.Product>
...
AssociationSet Name="FK_Orders_Customers" >
<"Association="NorthwindModel.FK_Orders_Customers
</"End Role="Customers" EntitySet="Customers>
</"End Role="Orders" EntitySet="Orders>
<AssociationSet/>
AssociationSet Name="FK_Employees_Employees" >
<"Association="NorthwindModel.FK_Employees_Employees
</"End Role="Employees" EntitySet="Employees>
</"End Role="Employees1" EntitySet="Employees>
<AssociationSet/>
```

```
...
<EntityContainer/>
<Schema/>
```

6.3.4 OData Driver - Mapping Namespace, Owner and Qualifier

.The `Namespace` attribute of the schema is mapped to the model namespace

The EntityContainer is mapped to the database qualifier. The default qualifier is the EntityContainer with the .attribute `m:IsDefaultEntityContainer` set to `true`

EntityContainer elements are children of Schema elements. Since different Schemas can contain the same .<EntityContainer, the database qualifier value is `<Schema_Namespace>.<EntityContainer_Name`

.The present version of the driver exposes only one owner, which is called `entities`

Example

.The namespace of the Northwind service is `ODataWeb.Northwind.Model`

.The database qualifier of the Northwind service is `ODataWeb.Northwind.Model.NorthwindEntities`

.The database owner of the Northwind service is `entities`

6.3.5 OData Driver - Mapping Tables

.The data access driver exposes OData feeds as tables to the information design tool

.An EntitySet is mapped to a table. The `Name` attribute of the EntitySet is mapped to the table name

In the OData schema, an AssociationSet links two EntitySets. An AssociationSet is mapped to a table, if the multiplicity of both EntitySets is `*`. The `Name` attribute of the AssociationSet is mapped to the table name. If at .least one of the multiplicities of the EntityTypes is `1` or `0..1`, the AssociationSet is mapped to a foreign key

Example

Mapping EntitySets

:The following EntitySets of the Northwind service are mapped to tables

- `Customers`
- `Orders`
- `Products`

Example

Mapping AssociationSets

:The following AssociationSets of the Northwind service are also mapped to tables

- `CustomerCustomerDemo`
- `EmployeeTerritories`

The `CustomerCustomerDemo` AssociationSet is mapped to the `CustomerCustomerDemo` table, because the `CustomerCustomerDemo` Association links both `CustomerDemographic` and `Customer` EntityTypes .with `*` multiplicities

```
<"Association Name="CustomerCustomerDemo>
End Role="CustomerDemographics" Type="NorthwindModel.CustomerDemographic" >
</"*"=Multiplicity
</"*"=End Role="Customers" Type="NorthwindModel.Customer" Multiplicity>
<Association/>
```

Related Information

[81 OData Driver - Mapping Keys [page

OData Driver - Mapping Columns 6.3.6

An EntitySet is defined by an EntityType. An EntityType consists of a series of Properties. A Property of primitive type is mapped to a column of the table that represents the EntitySet. The `Name` attribute of the .Property is mapped to the column name

A Property of complex type is mapped to a set of table columns. One column corresponds to one subproperty. The column name is the concatenation of the names of the properties of complex type and primitive type, .separated by a slash (`/`). This mapping also applies to nested properties of complex type

Example

.The `Orders` table has the `OrderID` column, because the `Order` EntityType has the `OrderID` Property

The `Customers` table has the `Address`, `CustomerClothes/Suit` and `CustomerClothes/Shoes` :columns, because

- .The `Address` Property of the `Customer` EntityType has a primitive type
- The `CustomerClothes` Property of the `Customer` EntityType has a complex type, which is made of .the `Suit` and `Shoes` Properties of primitive type

OData Driver - Mapping Keys 6.3.7

Mapping Primary Keys

The Key of an EntityType is mapped to the primary key of the table that maps the corresponding EntitySet. This .can be one or more columns

> **Example**
>
> The `Customers` table has a primary key on the `CustomerID` column, because the `Customer` EntityType .has a Key that refers to the `CustomerID` Property

Mapping Foreign Keys

The OData protocol uses NavigationProperties to expose the join paths of a relational model. .NavigationProperties use Roles defined in AssociationSets to link EntitySets according to their multiplicity

The OData driver represents bidirectional joins as foreign keys. A bidirectional join can be created between tables if EntityTypes of the EntitySets that represent these tables contain NavigationProperties that use the same AssociationSet to link EntitySets. This means that both ends of an AssociationSet must have NavigationProperties in both EntityTypes. Associations that do not meet this condition are not exposed as .foreign keys

If the multiplicity of both EntitySets is `*`, the AssociationSet is mapped to a table. If at least one of the multiplicities of the EntityTypes is `1` or `0..1`, the AssociationSet is mapped to a foreign key in the table that represents the EntitySet of `*` multiplicity. The pattern of a foreign key name is `-idref-` .`<-<Primary Key<<NavigationProperty`

> **→ Remember**
>
> Foreign keys are hidden columns in data foundation tables by default, because they do not contain business data. However, you can display them by editing the table and column properties. See the .*Information Design Tool User Guide*

> **⚠ Caution**
>
> SAP recommends application users not to query `-idref` columns, because it may cause a driver .performance decrease

> **Example**
>
> **Foreign Keys of an EntitySet**
>
> The `Orders` table has `-idref-Customer-CustomerID`, `-idref-Employee-EmployeeID`, and `-` :`idref-Shipper-ShipperID` foreign keys because

- .The `Order` EntityType has the following NavigationProperties

```
<"EntityType Name="Order>
...
NavigationProperty Name="Customer" >
Relationship="NorthwindModel.FK_Orders_Customers" FromRole="Orders"
</"ToRole="Customers
NavigationProperty Name="Employee" >
Relationship="NorthwindModel.FK_Orders_Employees" FromRole="Orders"
</"ToRole="Employees
NavigationProperty Name="Shipper" >
Relationship="NorthwindModel.FK_Orders_Shippers" FromRole="Orders"
</"ToRole="Shippers
<EntityType/>
```

- These NavigationProperties refer to the `FK_Orders_` Associations, which link the `Order` EntityType to `Customer`, `Employee` and `Shipper` EntityTypes. There is one `0..1` multiplicity in each Association. .This generates three foreign keys in the table that represents the `Orders` EntitySet

```
<"Association Name="FK_Orders_Employees>
End Role="Employees" Type="NorthwindModel.Employee" >
</"Multiplicity="0..1
</"*"=End Role="Orders" Type="NorthwindModel.Order" Multiplicity>
<Association/>
```

- The `CustomerID` in `-idref-Customer-CustomerID` comes from the primary key of the .`Customers` table
- The `EmployeeID` in `-idref-Employee-EmployeeID` comes from the primary key of the .`Employees` table
- The `ShipperID` in `-idref-Shipper-ShipperID` comes from the primary key of the `Shippers` .table

Example

Foreign Keys of an AssociationSet

The `CustomerCustomerDemo` table has the `-idref-CustomerDemographics-CustomerTypeID` and :`-idref-Customers-CustomerID` foreign keys because

- .The `Customer` EntityType has a `CustomerDemographics` NavigationProperty

```
<"EntityType Name="Customer>
...
NavigationProperty Name="CustomerDemographics" >
Relationship="NorthwindModel.CustomerCustomerDemo" FromRole="Customers"
</"ToRole="CustomerDemographics
<EntityType/>
```

- .The `CustomerDemographic` EntityType has a `Customers` NavigationProperty

```
<"EntityType Name="CustomerDemographic>
...
NavigationProperty Name="Customers" >
Relationship="NorthwindModel.CustomerCustomerDemo"
</"FromRole="CustomerDemographics" ToRole="Customers
<EntityType/>
```

- The NavigationProperties refers to the `CustomerCustomerDemo` Association, which links `Customer` and `CustomerDemographic` EntityTypes. This generates two foreign keys in the table that represents .the `CustomerCustomerDemo` AssociationSet

```
<"Association Name="CustomerCustomerDemo>
End Role="CustomerDemographics" >
</"*"=Type="NorthwindModel.CustomerDemographic" Multiplicity
</"*"=End Role="Customers" Type="NorthwindModel.Customer" Multiplicity>
<Association/>
```

- The `CustomerID` in `-idref-Customers-CustomerID` comes from the primary key of the .`Customers` table
- The `CustomerTypeID` in `-idref-CustomerDemographics-CustomerTypeID` comes from the .primary key of the `CustomerDemographics` table

OData Driver - Mapping Documentation Elements 6.3.8

Depending on availability, either Summary or LongDescription subelements of Documentation are mapped to .descriptions of relational model entities

A Documentation subelement of EntitySet and AssociationSet is displayed as the table description in the information design tool. A Documentation subelement of Property or NavigationProperty is displayed as the .column description. If there is no Summary or LongDescription, then the Description field remains empty

.Descriptions are not localized

OData Driver - Mapping Entities of Derived Types 6.3.9

.The following example illustrates an EntitySet of type `Employee`

```
</ "EntitySet Name="Employees" EntityType="Employee>
```

The following diagram shows the inheritance concept between one base type `Employee`, and two derived types, `ExternalEmployee` and `InternalEmployee`. The derived types inherit from all properties of the base .type. They also define additional properties, which are called direct properties

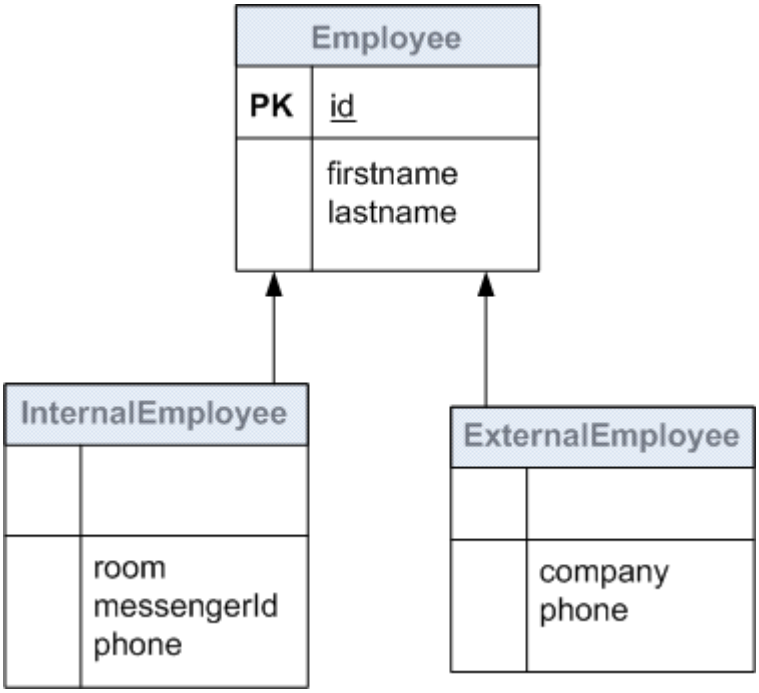

For a specific EntitySet, the result schema is the result of a merge to one general type. The following diagram .shows the Employee table as represented in the relational model

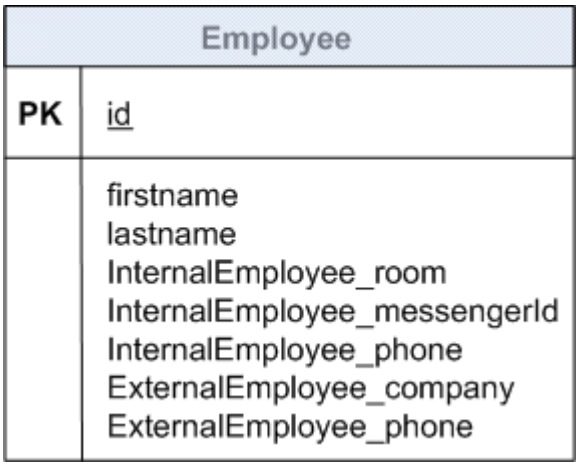

The `Employee` table of the relational model will contain information from both entities, that is, columns of the parent type and of the derived types. To prevent naming conflicts, columns declared in derived types are .prefixed with the name of the EntityType. They can also contain the null value

Monitoring the OData Driver Performance 6.3.10

You may consider the following behaviors of the OData driver to improve the performance of the connection at .query execution

Executing Operations on Client or Provider Side

When creating a connection, you can choose to execute some operations of the SQL query at the driver or .provider level. The following table shows the parameters of the connection wizard that control this behavior

If a parameter is selected, the OData service provider handles the corresponding operation if it can support it. .This is the default behavior. If unselected, the OData driver handles the operation

> **⚠ Caution**
>
> SAP recommends that you do not use the data access driver to execute these operations, because it can reduce the connection performance. Since the full data set needs to be transferred to the client, response time increases. Use it only if the OData service provider does not support or partially supports the .operation

Impact on Performance	Operation	Parameter
If the parameter is unselected, the OData driver handles the SQL projection, .which increases the data traffic significantly	SELECT	*Column Selection*
You can execute some filtering operations at the driver level if the OData standards do not support them. However, filters on the provider usually .reduce query execution time The Data Access layer applies the following logic to improve performance: any filtering condition compatible with OData standards is pushed to the OData provider. The OData driver executes any other incompatible filter that .the WHERE clause may contain. See the example below	WHERE	*Supported Filter Conditions*
The OData provider executes the ORDER BY operation if no DISTINCT or GROUP BY expression is used in the query. If a query contains either a DISTINCT or a GROUP BY expression, then the driver has to perform the .sorting operation, which increases the execution time	ORDER BY	*Sorting*

> **ℹ Note**
>
> - The ORDER BY operation depends on the `Bucket Split Size` SBO parameter when it is performed .by the driver
> - The BETWEEN operator is mapped to OData comparison functions, then executed by the OData .provider
> - The LIKE and NOT LIKE operators are usually executed on the client. However, they are translated into `%` pattern is placed at the end or at the the `startsWith` and `endsWith` OData functions, if only one .beginning of the filter value respectively

> **Example**
>
> **Supporting Filter Expressions**
>
> :The following query contains two filter conditions in the WHERE clause
>
> ```
> 'SELECT * FROM T1 WHERE col1='San Francisco' AND col2 LIKE 'S%n
> ```

The OData provider can handle the first part of the clause, but not the second one. The OData driver then .'executes `col2 LIKE 'S%n'`, while the provider executes `col1='San Francisco`

Example

Mapping the startsWith and endsWith Functions

.The following SQL query returns the Sales employees who live on boulevards

```
SELECT * FROM EMPLOYEES WHERE EMPLOYEES."Title" LIKE 'Sales %' AND
                                '.EMPLOYEES."Address" LIKE '% Blvd
```

:It corresponds to the URI below

```
http://services.odata.org/Northwind/Northwind.svc/Employees?
 ('.$filter=startswith(Title,'Sales')&endswith(Address,'Blvd
```

Executing Aggregate Functions

The `COUNT` database function is the only aggregate function that the OData 2.0 protocol supports. Other aggregate functions and grouping triggered by the GROUP BY clause are executed on the client. However, if the driver performs calculations that modify the result before the count is computed, the `COUNT` function must also .be executed on the client. This can decrease the connection performance

Setting the Connection Timeout Parameter

You can choose the value of the *Connection Timeout* parameter in the connection wizard to fine-tune the driver performance. It specifies the time in seconds a connection remains active in case of no response from the data .source

You have to choose the best parameter value for the best performance. For example, if you connect to a data source with a high response time, you may choose a high value for *Connection Timeout* to wait for the server response and not to raise an error too early. If your data source is usually fast, you may choose a low value, not .to wait too long for an error if the server does not respond

Using the Cache Metamodel

The *Cache MetaModel* parameter is selected by default in the connection wizard. It allows you to retrieve the metadata model only once for the duration of the connection in the connection pool, instead of doing it at each .query execution. This results in a performance increase of the connection

Note

.You must enable the connection pooling if the metadata model is cached

Related Information

[76 OData Driver Capabilities [page

OData Driver - Nontrivial Behaviors and Restrictions 6.3.11

Sorting Algorithms

Sorting algorithms may differ from one service provider to another. This can lead to different results when .ORDER BY is used in the query

Since the OData driver may execute sorting operations using its own algorithm, the use of combined .operations such as ORDER BY, GROUP BY and DISTINCT may also lead to different sort orders

Mapping the Max Rows Parameter

The `$top` OData function is mapped to the `Max Rows` parameter of the Query Panel, only if the query operations do not modify the number of rows. Query results can be erroneous if a filter is applied, which .removes some rows from the expected `$top` result

Example

:The following OData query returns the first 15 rows from the `Orders` table

```
http://services.odata.org/Northwind/Northwind.svc/Orders?$top=15
```

:The following query returns the first 15 rows where the shipment city is "Reims". This returns only 5 rows

```
http://services.odata.org/Northwind/Northwind.svc/Orders?$top=15&
'$filter=ShipCity eq 'Reims
```

Restrictions to the COUNT Function

A row count on a table in the information design tool is semantically counting rows that contain non-null values for the defined columns. Some Azure services return only the total number of rows in one table. This may .cause a discrepancy between expected and actual query results

Restrictions to the SAP Gateway Services

If the Gateway service provider does not support filters on all columns, you must not select *Supported Filter Conditions* when creating the connection. If it does not support sorting on all columns, you must not select .*Sorting* when creating the connection

The schema may indicate these filtering and sorting restrictions with the help of the `sap:filterable` and .`sap:sortable` metadata. In the present version, the OData driver does not map these attributes

Some providers may not offer a full table scan capability on all tables. This can lead to runtime errors, for .example if one of the tables involved in a JOIN cannot be scanned

SAP recommends that you create connections to the SAP ERP system directly to avoid issues with ad hoc .queries

OData Driver - Configuring Column Maximum Size 6.3.12

:For some properties, the `MaxLength` parameter may have the value `Max`. For example

```
Property Name="Synopsis" Type="Edm.String" Nullable="true" MaxLength="Max" >
                                        </"Unicode="true" FixedLength="false
```

Since the OData driver cannot recognize this nonnumeric value, it has to be configured. The `cs.cfg` :configuration file provides the following parameters

- `Binary Max Length` to set the maximum size of table columns whose type is binary
- `String Max Length` to set the maximum size of table columns whose type is string

Related Information

[192 Binary Max Length [page
[204 String Max Length [page

Authenticating OData Sources 6.3.13

Access to some OData data sources requires authentication. An application can authenticate to an OData data :source using the following methods

- .HTTP basic authentication, which uses a username and a password. Credentials are not encrypted
- A GET access token, that is, a {key, value} pair appended to the service URI. The token key and value can vary according to the service. Set the token through custom parameters by using *Custom Authentication* . **<**<*Parameters* in the connection wizard. Use the following pattern: **<**`<key>`**>=<**`<value`

i Note

The Data Access layer does not provide traces for custom authentication parameters, because they contain security information. They are replaced with `<CUSTOM_AUTH_PARAMS>` in the OData driver traces. However, consider using other tracing levels such as the *Enable Job Tracing* option in the CMC to display .the parameters

Example

Access Token

```
.<<http://wine.cloudapp.net/Regions?apikey=<<api key value
```

Authenticating Microsoft Azure Data Sources

You connect to a Microsoft Azure data set using the HTTP basic authentication. In the connection wizard, enter .the account key as password. You can leave the username blank

Tracing the OData Driver Activity 6.3.14

The Data Access layer traces the OData driver with the PATH and DEBUG severity levels. The PATH traces contain the entries and exits of each method used in query planning and execution. It allows you to find out whether the OData driver or the OData provider has executed a query operation and where the cause of a .problem can be

The information contained in the URI (the data source credentials, the proxy server credentials and the custom .authentication parameters) is blanked out in driver traces

SAP ERP Driver 6.4

The Data Access layer allows the BI platform to connect to SAP ERP systems through the SAP Java Connector :(JCo) 3.x network layer. It provides a data access driver that allows access to the following ERP objects

- InfoSets
- SAP Queries
- ABAP functions

.For more information about supported SAP ERP systems, see the *Product Availability Matrix*

SAP ERP connectivities support single sign-on (SSO) on all platforms. For more information about .authentication, see the *SAP BusinessObjects Business Intelligence platform Administrator Guide*

SAP ERP connectivities also support Preferred Viewing Locale (PVL) for all authentication modes. You .deactivate the use of PVL by checking *Save Language* when creating the connection

You can find the driver configuration files in the `<connectionserver-install-dir>\connectionServer .\jco` directory. The `jco.prm` file lists the data access driver capabilities in terms of database operations

.The connection wizard provides a workflow to enter the necessary information to connect to SAP ERP systems

Related Information

[29 Single Sign-On Support [page

SAP ERP Driver Capabilities 6.4.1

:The data access driver supports the following querying capabilities

- (Basic operations (SELECT, WHERE, ORDER BY, GROUP BY, and AS
- Basic operators (=, !=, <, <=, >, >=, BETWEEN, NOT BETWEEN, IN, NOT IN, AND, OR) whose operands can be either column names or constant values
- DISTINCT clause within the SELECT statement
- Constant values within the SELECT statement
- LIKE and NOT LIKE accepts escape characters
- Nested queries within the FROM clause

.The Data Access layer performs the sorting operations internally

> **i Note**
>
> The data access driver does not allow ordering columns by index in SQL statements. Only ORDER BY with column names is a valid clause. The `ORDER_BY_SUPPORTS_COLUMN_INDEX` parameter is set to `NO` in the `.jco.prm` file

Related Information

[117 Local Disk Used as a Cache for Sorting Operations [page
[240 ORDER_BY_SUPPORTS_COLUMN_INDEX [page

SAP ERP Driver - Access to InfoSets and SAP Queries 6.4.2

About InfoSets and SAP Queries

In the SAP ERP system, InfoSets and SAP Queries are organized within either a local work area or a global work area. Objects within the local work area can only be accessed by the SAP ERP client used, whereas objects of .the global work area can be accessed by all clients. An SAP Query is created in a user group and belongs to it

.For more information about work areas and user groups, refer to your SAP ERP documentation

Object Mapping

The data access driver exposes InfoSets and SAP Queries as tables to the Information Design Tool. InfoSets and SAP Queries are made of a series of fields, which are mapped to table columns. Fields are used in SELECT .statements

.At driver level, work areas are mapped to qualifiers. The default qualifier corresponds to the Local work area

User groups are mapped to owners. User groups of a work area are then placed beneath a qualifier that .represents this work area

InfoSets of a work area are placed beneath a qualifier that represents this work area and beneath a fictive owner called `INFOSET`. SAP Queries of a work area are placed beneath the qualifier that represents this work .area. SAP Queries of a user group are placed beneath the owner that represents this user group

:The organization of InfoSets and SAP Queries in a work area is depicted in the figure below

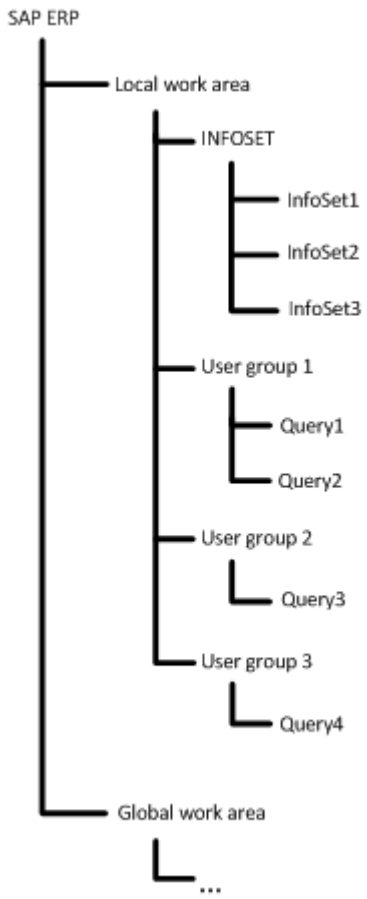

Fields are mapped to table columns. An InfoSet or an SAP Query contains fields that are both projection and selection fields. It also contains selection fields that are not used for projection. When you create a connection with the connection wizard, you choose whether these selection fields are represented as table columns. The *Map Selection Fields into Table Columns* parameter addresses this functionality. If selected, then the field is mapped as an optional input column. If unselected, the selection field is ignored, and no filtering is possible on .this field

> **i Note**
>
> There is no specific mapping for obligatory selection fields. The application user must query these fields .with filters

Input Columns

Input columns of a table are columns on which an equal condition (= operator) must be given when the application user queries the table. Only equal conditions are allowed on input columns. `IN` conditions are .forbidden

In the information design tool, the user can view input columns as mandatory or optional. A mandatory input column is a column for which it is mandatory to set a value. An optional input column is a column for which it is .not mandatory to set a value

If the user does not set any value to an optional input column in a query, then Connection Server returns one of :the following

- No value if the optional input column has no default value
- The default value if the optional input column has a default value

Driver Capabilities

When the application user queries an InfoSet, some database operations are passed to the SAP ERP system (SELECT, WHERE, sorting only with ORDER BY columns, and AS), while others are handled internally by the driver (other filtering with WHERE, GROUP BY, DISTINCT and sorting only with ORDER BY aggregate .(functions

When the application user queries an SAP Query, some operations are also passed to the ERP system. These .are SELECT, WHERE, ORDER BY (only if the SAP query already contains the same sorting) and AS

For more information on the operations directly managed by the system, see your SAP ERP system .documentation

SAP ERP Driver - Access to ABAP Functions 6.4.3

→ Remember

.The SAP ERP driver allows you to create connections to released and unreleased ABAP functions

ABAP Function Concepts

ABAP functions are made of a series of parameters that can either be input parameters used in function calls, or output parameters, which are contained in call responses. In SAP terminology, input parameters are called import, whereas output parameters are called export. Some parameters can be both input and output. They are called changing parameters. Besides import, export and changing parameters, there are also table .parameters, which can be considered as a type of changing parameters

:An ABAP function parameter can have the following type

- Field of primitive ABAP type
- Structure, which is a sequence of several fields
- Table, which can either be made of fields, structures, or even tables

Object Mapping

The data access driver exposes ABAP functions as tables to the information design tool. At driver level, ABAP function groups are mapped to owners and ABAP functions are mapped to a qualifier called `ABAPFunction`. This means each ABAP function is placed beneath a specific owner, which corresponds to a function group in .the SAP ERP system

Import, changing, and table parameters used as input are mapped to input columns. Export, changing, and table parameters used as output are mapped into tables. Input columns can either be mandatory or optional. .The Data Access layer considers these parameters as primary key attributes, which are not nullable

:The driver maps ABAP function parameters as follows

- A mandatory parameter is mapped to a mandatory input column. The user has to set a value to this .column
- An optional parameter that has a default value is mapped to an optional input column. The user does not have to set a value to this column. The value returned to Connection Server by the data source in that case .is the default value
- An optional parameter with no default value is also mapped to an optional input column. Connection :Server returns the following values of string data type, depending on the SQL type of the input column

Value	SQL Type
0	SQL_Integer
An empty string	SQL_Char, SQL_VarChar, SQL_Binary
0.0	SQL_Double, SQL_Float, SQL_Numeric
00010101	SQL_Date
000000	SQL_Time
An empty string	Any other type

> **i Note**
>
> The driver appends a `<column name>-ID` column to the table which the ABAP function is mapped into .and another `<column_name>-IDREF` to the table if it contains a reference to another table

Column Renaming

.Column names are renamed at driver level. The following table shows the prefixes added to the columns

Prefix	Parameter	Input or Output
_IMPORT-	Import	Input

Prefix	Parameter	Input or Output
_IMPORT_CH-	Changing	Input
_IMPORT_CH-	Table	Input
_EXPORT_CH-	Changing	Output
_EXPORT_CH-	Table	Output

> **i Note**
>
> When an output table parameter (A) is made of another table (B), both tables are renamed – .EXPORT_CH_A and -EXPORT_CH_A.B respectively

Driver Capabilities

All database operations (SELECT, WHERE, ORDER BY, GROUP BY, AS, etc.) are handled internally by the driver, .while equal conditions on input columns are passed to the SAP ERP system

> **→ Remember**
>
> The driver only accepts tables with one single row as input parameters. They are equivalent to input .structures

- When you create a connection in the connection wizard, you set whether a changing parameter of table type or a table parameter is considered as both input and output. The *Map Table Parameters into Input Columns* parameter addresses this functionality. If checked, the parameter is both input and output. In this case, it can only be a structure as input. If not checked, the parameter is only considered as an output .parameter
- The driver considers fields of an optional input structure as optional input columns. Input columns are considered optional as a whole, that is, if a column has a value, the others must also have a value. The .application user must ensure all columns have a value
- Some ABAP function parameters may have values whose size is reported to be equal to zero by the SAP ERP system. The driver uses the `String Max Length` parameter of the `cs.cfg` file to set a string .maximum length to the table columns that are mapped to these parameters

Related Information

[204 String Max Length [page

SAP ERP Driver Restrictions 6.4.4

- You cannot query ERP objects based on ABAP programs that involve a SAPGUI processing, because they .cannot be accessed using Remote Function Calls
- The JCo API does not support array fetch. This means the result data is returned all at once. To restrict the number of resulting rows and to avoid an out-of-memory issue, the application user has to filter data .appropriately. Regardless of this restriction, Connection Server still applies array fetch

> **i Note**
>
> The application user can also set a value to `Max Rows` in the Query Panel. However, the SAP ERP system does not take `Max Rows` into account if the universe defined is multisource or if the query .(requires computations after data is fetched (SELECT DISTINCT, ORDER BY, and GROUP BY

- The `ERP Max Rows` parameter of the `jco.sbo` configuration file allows the application user to query without filter an InfoSet or an SAP Query table that only contains numerical data type columns. The user can also query a table containing numerical and DATS data type columns. This parameter is also used when `Max Rows` is not passed to the SAP ERP system. `ERP Max Rows` can be used with single-source and .multisource universes. Set `ERP Max Rows` to an appropriate value to avoid out-of-memory issues

> **i Note**
>
> In the case of a multisource universe, you can also set a value to the `Max Rows` parameter of the Query Panel of the data federation administration tool. See the *Data Federator Administration Tool .Guide* for more information

Related Information

[190 Array Fetch Size [page
[210 ERP Max Rows [page

XML Driver 6.5

.The Data Access layer allows the BI platform to connect to XML documents as data sources

XML documents are based on XML schemas. An XML schema is an XSD document that defines the metadata .of an XML data source

The connection wizard provides a workflow to enter the necessary information to connect to XML data .sources. XML data sources show up under `XML Files` DBMS and `XML File Connector` NetworkLayer

You can find the driver configuration files in the `<connectionserver-install-dir>\connectionServer\xml` directory. The `xml.prm` file lists the data access driver capabilities in terms of database operations and .functions

XML Driver Capabilities 6.5.1

:The data access drivers support the following querying capabilities

- (Basic database operations (SELECT, WHERE, ORDER BY, GROUP BY, DISTINCT
- (Column aliases within the ORDER BY clause (AS
- Nested queries within the FROM clause
- Filtering operators (=, !=, <, <=, >, >=, AND, OR, BETWEEN, NOT BETWEEN, IN, NOT IN, LIKE, NOT LIKE, (IS NULL, IS NOT NULL

.The data access driver does not support JOIN operations

.The data access driver supports the `MIN`, `MAX`, `AVG`, `SUM`, and `COUNT` grouping functions in SELECT statements

Related Information

[117 Local Disk Used as a Cache for Sorting Operations [page

XML File Location 6.5.2

XML documents used as data sources can be either local or remote. For files on remote systems, the HTTP, FTP, and SMB protocols are supported. The present release also supports the HTTPS and FTPS encrypted .protocols based on one certificate

> **i Note**
>
> SMB is the standard file sharing protocol on Microsoft Windows. Since the jCIFS library provides access to the protocol, you must install the jCIFS JAR file in the Connection Server directory, that is `<connectionserver-install-dir>\connectionServer\sharedLibraries\jcifs`. The version ./to install is 1.3.15. It is available at http://jcifs.samba.org

You can set whether the data source is local or remote using the *Location Type* parameter of the connection wizard. If the data source is remote, you can also set the protocol used through the *Protocol* parameter of the .wizard. The *Protocol* value must match the protocol specified in the *Filepath or Pattern* parameter value

Example

XML File Paths

- `C:\xml\report.xml` or `xml/report.xml` for a local file
- `http://server:8080/path/report.xml` for a file accessible through HTTP
- `ftp://server/path/` for files accessible through FTP
- `smb://server:port/myshare/mydirectory` for files accessible through SMB

Related Information

[73 CSV File Location [page

XML Document and Schema Example 6.5.3

The following examples illustrate the structure of an XML document called `clubdemo.xml` and based on the `.clubdemo.xsd` schema

Example

clubdemo.xml Document

```
<?"xml version="1.0" encoding="UTF-8?>
ClubDemo xmlns:xsi="http://www.w3.org/2001/XMLSchema-instance" >
<"xsi:noNamespaceSchemaLocation="clubdemo.xsd
<Countries>
</"Country name="France>
</"Country name="US>
<Countries/>

<Customers>
<"Customer ID="204>
<Name type="first">Christine</Name>
<Name type="last">Martin</Name>
<Age>25</Age>
<Address>12, allee Victor Hugo</Address>
<ZIP>75016</ZIP>
<City>Paris</City>
</"Country name="France>
<Invoice>1234</Invoice>
<Customer/>
<"Customer ID="103>
<Name type="first">Peter</Name>
<Name type="last">Travis</Name>
<Age>34</Age>
<Address>7835 Hartford Drive</Address>
<ZIP>06108</ZIP>
<City>Springfield</City>
</"Country name="US>
<Invoice>23204</Invoice>
<Customer/>
<"Customer ID="106>
<Name type="first">William</Name>
```

```
<Name type="last">Baker</Name>
<Age>64</Age>
<Address>2890 Grant Avenue</Address>
<ZIP>20020</ZIP>
<City>Washington DC</City>
</"Country name="US>
<Invoice>35306</Invoice>
<Invoice>44106</Invoice>
<Customer/>
<Customers/>
<ClubDemo/>
```

Example

clubdemo.xsd Schema

```
<"xs:schema xmlns:xs="http://www.w3.org/2001/XMLSchema>
<"xs:element name="ClubDemo>
<xs:complexType>
<xs:sequence>
</"xs:element ref="Countries>
</"xs:element ref="Customers>
<xs:sequence/>
<xs:complexType/>
<"xs:key name="countkey>
</"xs:selector xpath="Countries/Country>
</"xs:field xpath="@name>
<xs:key/>
<"xs:key name="custkey>
</"xs:selector xpath="Customers/Customer>
</"xs:field xpath="@ID>
<xs:key/>
<"xs:keyref name="custkeyref" refer="countkey>
</"xs:selector xpath="Customers/Customer>
</"xs:field xpath="Country/@name>
<xs:keyref/>
<xs:element/>
<"xs:element name="Countries>
<xs:complexType>
<xs:sequence>
</"xs:element ref="Country" maxOccurs="unbounded>
<xs:sequence/>
<xs:complexType/>
<xs:element/>
<"xs:element name="Country>
<xs:complexType>
</"xs:attribute name="name" type="xs:string>
<xs:complexType/>
<xs:element/>
<"xs:element name="Customers>
<xs:complexType>
<xs:sequence>
</"xs:element ref="Customer" maxOccurs="unbounded>
<xs:sequence/>
<xs:complexType/>
<xs:element/>
<"xs:element name="Customer>
<xs:complexType>
<xs:sequence>
<"xs:element name="Name" maxOccurs="2>
<xs:complexType>
<xs:simpleContent>
<"xs:extension base="xs:string>
</"xs:attribute name="type" type="xs:string>
<xs:extension/>
<xs:simpleContent/>
```

```
                                                <xs:complexType/>
                                                      <xs:element/>
                        </"xs:element name="Age" type="xs:integer>
                    </"xs:element name="Address" type="xs:string>
                         </"xs:element name="ZIP" type="xs:string>
                        </"xs:element name="City" type="xs:string>
                                      <"xs:element name="Country>
                                                <xs:complexType>
                  </"xs:attribute name="name" type="xs:string>
                                                <xs:complexType/>
                                                      <xs:element/>
                    xs:element name="Invoice" type="xs:integer" >
                                                        </"maxOccurs="unbounded
                                                        <xs:sequence/>
                          </"xs:attribute name="ID" type="xs:integer>
                                                        <xs:complexType/>
                                                               <xs:element/>
                                                                   <xs:schema/>
```

XML Driver - Mapping Multiple Files 6.5.4

You can connect to multiple files if the *Filepath or Pattern* parameter of the connection wizard is set to a pattern, for example `clubdemo_*.xml`, which is matched by files such as `clubdemo_1.xml` and .`clubdemo_2.xml`

→ Remember

You cannot connect to multiples files located on an HTTP server. The HTTP protocol does not support the .use of wildcards in patterns

If the *Merge Files into One* parameter is selected in the connection wizard, identical tables from multiple XML files are merged into one table. The name of the table qualifier is the full path of the pattern, for example `C:` .`\files\xml\clubdemo_*.xml`. It is assumed that all files have the same schema

If the paremeter is not selected, tables are not merged as they do not belong to the same qualifier. Every XML document is then mapped to a database qualifier. The name of the qualifier is the full path of the XML file, for .example `C:\files\xml\clubdemo_1.xml`. In that case, each XML file can have its own schema

.No data is mapped to database owners

XML Driver - Mapping Tables 6.5.5

.The data access driver exposes XML files as tables to the information design tool

.The XML document root is mapped to a table

.Elements that have `maxOccurs` value greater than `1` are mapped to tables

The name of the table mapped to an element is the concatenation of all the element names between the root .(`/`) and the element, separated with a slash

Example

:The `clubdemo.xml` document is mapped to the following tables

- `ClubDemo`
- `ClubDemo/Countries/Country`
- `ClubDemo/Customers/Customer`
- `ClubDemo/Customers/Customer/Invoice`
- `ClubDemo/Customers/Customer/Name`

Related Information

[98 XML Document and Schema Example [page

XML Driver - Mapping Columns 6.5.6

:The following objects under an XML element are mapped to columns of the table that represents this element

- Attributes
- Elements of either `simpleType` or `complexType` with a `simpleContent` element
- Texts which are in a mixed element, that is, whose type defines `mixed=true`
- `any` and `anyAttribute`

If the column represents an attribute, its name is the concatenation of the names of all the elements starting with (but not including) the element with `maxOccurs` greater than `1`, up to and including the element hosting .this attribute. The attribute name is prefixed with `@`, to avoid name conflicts with other elements

If the column represents an element, its name is the concatenation of the names of all the elements starting .with (but not including) the element with `maxOccurs` greater than `1`

.If the column represents the same element as its table, its name is the element name

.(`/`) The separator used in concatenations is the slash

) when they represent parent elements used in paths to build–) Element names are prefixed with a hyphen .foreign keys

.The following mapping examples refer to the topic on the example of XML document and schema

Example

:The `ClubDemo` table has the following column

- `id-`

Example

:The `ClubDemo/Countries/Country` table has the following columns

- name@
- Countries/-ClubDemo/-id-

Example

:The `ClubDemo/Customers/Customer` table has the following columns

- Age
- Address
- ZIP
- City
- Country/@name
- ID@
- Customers/-ClubDemo/-id-

Example

:The `ClubDemo/Customers/Customer/Invoice` table has the following columns

- id-
- Invoice
- Customers/@ID-

Example

:The `ClubDemo/Customers/Customer/Name` table has the following columns

- id-
- Name
- type@
- Customer/@ID-

In the XML schema, `name`, `type`, and `ID` are attribute names of the `Country`, `Name`, and `Customer` elements respectively. The `Invoice` and `Name` columns represent the `Invoice` and `Name` elements respectively. See the .topic on mapping primary and foreign keys to learn about the meaning of the other column names

Related Information

[98 XML Document and Schema Example [page
[103 XML Driver - Mapping Primary and Foreign Keys [page
[107 XML Driver - Mapping anyType and simpleType [page

XML Driver - Mapping Primary and Foreign Keys 6.5.7

Primary Keys

:The following rules apply to mapping primary keys

- The driver generates the primary key of the table that maps the document root. The associated column is .called `-id` and the column value is the document name
- .An attribute or element of type `"xs:ID"` is mapped to a column that represents a primary key

:If the XML schema defines a key with `<xs:key>`, the following rules apply

- If the key is defined at the root level and if the selector contains an element that has a `maxOccurs` value .greater than `1`, then the key is mapped to the primary key of the corresponding table
- If the key is not defined at the root level, then the primary key of the table is the combination of the primary .key of the parent element and the field of the key

If the schema does not define a primary key for a selector element that has a `maxOccurs` value greater than `1`, .a column with name `-id` is added to the table as primary key

Example

Document Root

The `ClubDemo` element is the root of `clubdemo.xml` document. The `-id` column is created and defined .as the primary key of the `ClubDemo` table. The `-id` column value is `clubdemo.xml`

Example

Explicit Key

The following key set at the root level defines the `@name` column of the `ClubDemo/Countries/Country` :table as primary key

```
<"xs:key name="countkey>
</"xs:selector xpath="Countries/Country>
</"xs:field xpath="@name>
<xs:key/>
```

The `ClubDemo/Customers/Customer` table has the `@ID` column as primary key, because the schema :defines the `custkey` explicit key

```
<"xs:key name="custkey>
</"xs:selector xpath="Customers/Customer>
</"xs:field xpath="@ID>
<xs:key/>
```

Example

No Explicit Key

The `ClubDemo/Customers/Customer/Invoice` table has an `-id` column as primary key, because the .schema does not define a key for this element

Foreign Keys

If the XML schema defines a key reference with `<xs:keyref>`, and if the key reference is defined at the same .level as the key it references, then the key reference is mapped to a foreign key of the corresponding table

For each table that corresponds to an element which is not the root, the foreign key is built from the primary key columns of its parent table and the reverse path from the element to its parent. This enables the mapping .of the relationships between parent and child elements

! Restriction

.Although data foundations expose foreign keys, the XML driver does not support JOIN operations

Example

Keyref

:The `ClubDemo/Customers/Customer` table has the following foreign keys

- `Country/@name`, which is the field of the following keyref:

```
<"xs:keyref name="custkeyref" refer="countkey>
  </"xs:selector xpath="Customers/Customer>
          </"xs:field xpath="Country/@name>
                                  <xs:keyref/>
```

.Note that `countkey` is the explicit key defined for a table which is not a parent

- `Customers/-ClubDemo/-id`, which is built from the reverse path to its parent table and the– primary key of the parent table

Example

No Keyref

The `ClubDemo/Customers/Customer/Invoice` table has `-Customer/@ID` column defined as a foreign .key, which is built from the primary key column of the parent table and the reverse path to its parent table

Related Information

[98 XML Document and Schema Example [page
[101 XML Driver - Mapping Columns [page

XML Driver - Mapping Mixed Elements 6.5.8

The whole content of a mixed element is mapped to a table column. This includes its children and all data .between the children

.Attributes of a mixed element are mapped to columns, independently of how the element is mapped

Example

In this example, the `documentation` element has a `complexType` made of three child elements (`name`, `datatype` and `location`).

```
<documentation>
The <name>XML driver</name> allows you to retrieve <datatype>XML</datatype>
data
.<from documents located on a <location>remote server</location
<documentation/>
```

:The Data Access layer maps such elements as follows

- .The `documentation` element is mapped to a table column
- The `documentation` element content becomes the column data, including its children and all data :between the children. In the example, the column contains the following row

```
The <name>XML driver</name> allows you to retrieve <datatype>XML</
datatype> data from documents located on a <location>remote server</
.<location
```

XML Driver - Mapping Recursive Elements 6.5.9

:The following schema defines recursive elements

```
<"xs:element name="parent>
<xs:complexType>
<xs:sequence>
</"xs:element ref="child" minOccurs="0" maxOccurs="5>
<xs:sequence/>
<xs:complexType/>
<xs:element/>
<"xs:element name="child>
<xs:complexType>
<xs:sequence>
</"xs:element ref="parent" minOccurs="0" maxOccurs="2>
<xs:sequence/>
<xs:complexType/>
<xs:element/>
```

.The XML driver maps the first `parent` element and the `child` element to tables and ignores the `parent` child

XML Driver - Mapping any and anyAttribute 6.5.10

Example

XSD Schema with any

```
<"xs:element name="documentation>
<xs:complexType>
<xs:sequence>
</"xs:element name="name" type="xs:string>
</"xs:element name="datatype" type="xs:string>
</"xs:any minOccurs="0" maxOccurs="1>
<xs:sequence/>
<xs:complexType/>
<xs:element/>
```

- The `name` and `datatype` are mapped to columns
- The `any` element is mapped to the `-any` column

Example

XML File with any

```
<documentation>
<name>Data Access Guide</name>
<datatype>XML</datatype>
<audience>
<type>External</type>
<name>Administrator</name>
<audience/>
<documentation/>
```

:The `-any` column data is the element name and its content. In the example, it contains the following row

```
<audience><type>External</type><name>Administrator</name></audience>
```

Restriction

If the `any` element has `maxOccurs` greater than `1`, the XML driver only maps to the `-any` column the .first element name encountered when parsing the XML document. Other element names are ignored

.In the following example, `<format>PDF</format>` is ignored

```
<documentation>
<name>Data Access Guide</name>
<datatype>XML</datatype>
<audience>
<type>External</type>
<name>Administrator</name>
<audience/>
<format>PDF</format>
<documentation/>
```

Example

XSD Schema with anyAttribute

```
<"xs:element name="documentation>
<xs:complexType>
<xs:sequence>
</"xs:element name="name" type="xs:string>
</"xs:element name="datatype" type="xs:string>
<xs:sequence/>
</xs:anyAttribute>
<xs:complexType/>
<xs:element/>
```

- The `name` and `datatype` are mapped to columns
- The `anyAttribute` element is mapped to the `-@anyAttribute` column

Example

XML File with anyAttribute

```
<"documentation myAttribute="ConnectionServer>
<name>Data Access Guide</name>
<datatype>XML</datatype>
<documentation/>
<"documentation myAttribute="DataFederator>
<name>Data Federator User Guide</name>
<datatype>any</datatype>
<documentation/>
```

`-@anyAttribute` column data is the element attribute name and its value. In the example, the The :column data contains the two following rows

```
"myAttribute="ConnectionServer
"myAttribute="DataFederator
```

XML Driver - Mapping anyType and simpleType 6.5.11

The following sections show how `anyType` and specific arrangements of `simpleType` in XML schemas are .mapped

Mapping of anyType Type

.The whole content of an element of `anyType` type is mapped to a table column

Example

anyType

.In the Club Demo example, the following `Address` element is mapped to the `Address` column

```
</"xs:element name"Address" type="xs:anyType>
```

Mapping of Lists of Values

.Independently of the base data type of the value, a list of values is always mapped to VARCHAR

Example

List of Data Types

.The base data type is an integer. The data type of the list of integers is VARCHAR

```
<intvalues>100 34 56 -23 1567</intvalues>
```

Mapping of Restrictions to a Type

.The value of an element can be restricted to a certain range. This does not impact the data type conversion

Example

Restriction

```
<"xs:element name="age>
<xs:simpleType>
<"xs:restriction base="xs:integer>
</"xs:minInclusive value="0>
</"xs:maxInclusive value="100>
<xs:restriction/>
<xs:simpleType/>
<xs:element/>
```

Mapping of Unions of Types

The XML data type to which the union is mapped is string, that is, CHAR or VARCHAR data types in data .foundations

Example

Union of Types

```
<"xs:element name="jeans_size>
```

```
<xs:simpleType>
</"xs:union memberTypes="xs:string xs:int>
<xs:simpleType/>
<xs:element/>
```

XML Driver - Configuring Column Maximum Size 6.5.12

:The `cs.cfg` configuration file provides the following parameters

- `Binary Max Length` to set the maximum size of table columns whose data type is binary
- `Integer Max Length` to set the maximum size of table columns whose data type is integer, nonPositiveInteger, negativeInteger, noNegativeInteger, and positiveInteger
- `String Max Length` to set the maximum size of table columns whose data type is string or any of the following: anyURI, QName, NOTATION, duration, gYearMonth, gYear, gMonthDay, gDay, gMonth, TYPE_NORMALIZEDSTRING, token, language, Name, NCName, XSD_TYPE_ID, IDREF, IDREFS, ENTITY, ENTITIES

Related Information

[192 Binary Max Length [page
[199 Integer Max Length [page
[204 String Max Length [page

Web Service Driver 6.6

The Data Access layer allows the BI platform to connect to services available on the Internet over HTTP or FTP. It provides a data access driver called Web Service driver to communicate with web services using SOAP 1.1 .messages

Web services are defined in documents which describe data types, messages, and bindings with the Web .Services Description Language (WSDL) 1.1

The Web Service driver supports web services of SOAP 1.1 binding and `document` or `rpc` style with `literal` :body. For example

```
<... wsdl:operation>
</"soap:operation ... style="document>
<wsdl:input>
</"soap:body use="literal>
<wsdl:input/>
...
<wsdl:operation/>
```

or

```
<... wsdl:operation>
</"soap:operation ... style="rpc>
<wsdl:input>
</"soap:body use="literal>
<wsdl:input/>
...
<wsdl:operation/>
```

> **→ Remember**
>
> The driver does not support other SOAP protocol versions and services of styles other than `document` and `rpc`.

The connection wizard provides a workflow to enter the necessary information to connect to web services. Web services show up under `Web Services (WSDL 1.1)` DBMS and `Web Services Connector` NetworkLayer.

You can find the driver configuration files in the `<connectionserver-install-dir>\connectionServer\xml` directory. The `xml.prm` file lists the data access driver capabilities in terms of database operations and functions.

Web Service Driver Capabilities 6.6.1

The XML and Web Service drivers share the same capabilities.

Related Information

[97 XML Driver Capabilities [page

Web Service Location 6.6.2

You set the Web Service location using the *Web Service URL* parameter in the connection wizard, with the following information:

- User name and password if required for authentication
- Proxy server address
- Proxy user name and password if required for authentication

The present release also supports the HTTPS and FTPS encrypted protocol based on one certificate.

→ Remember

The Web Service driver only supports the web service definition document and the associated services .hosted on the same HTTP server

Example

http://wsf.cdyne.com/WeatherWS/Weather.asmx?WSDL

Web Service Definition Example 6.6.3

The following example illustrates the `ClubDemo.wsdl` document which defines the CustomerService web service of `document` style. The sample URL of this web service is `http://ws.myexample.com/ClubDemo/ .ClubDemo.wsdl`

Example

:The WSDL document defines the following details

- The `CustomerService` service
- The `Customer` port
- The `GetCustomer` binding
- The `CustomerType` portType
- The `GetCustomerList` operation
- The `GetCustomerListByCountryRequest` input message, which contains the `Country` element
- The `GetCustomerListByCountryResponse` output message, which contains the `GetCustomerListReturn` element of `Customer` complex type

```
        "/wsdl:definitions targetNamespace="http://ws.myexample.com/ClubDemo>
          "xmlns:apachesoap="http://xml.apache.org/xml-soap
             "/xmlns:impl="http://ws.myexample.com/ClubDemo
               "xmlns:xsd="http://www.w3.org/2001/XMLSchema
              "/xmlns:wsdl="http://schemas.xmlsoap.org/wsdl
     "/xmlns:wsdlsoap="http://schemas.xmlsoap.org/wsdl/soap
        <"/xmlns:soap="http://schemas.xmlsoap.org/wsdl/soap

                                                          <wsdl:types>
           <"/schema targetNamespace="http://ws.myexample.com/ClubDemo>
                                        <"complexType name="Customer>
                                                      <sequence>
                            <"element name="Name" maxOccurs="2>
                                                <complexType>
                                          <simpleContent>
                        <"extension base="xsd:string>
        </"attribute name="type" type="xsd:string>
                                          <extension/>
                                         <simpleContent/>
                                              <complexType/>
                                                     <element/>
                      </"element name="Age" type="xsd:integer>
                  </"element name="Address" type="xsd:string>
                       </"element name="ZIP" type="xsd:string>
                      </"element name="City" type="xsd:string>
```

```
                                        <"element name="Country>
                                                <complexType>
                </"attribute name="name" type="xsd:string>
                                               <complexType/>
                                                      <element/>
                     element name="Invoice" type="xsd:integer" >
                                                        </"maxOccurs="unbounded
                                                        <sequence/>
                          </"attribute name="ID" type="xsd:integer>
                                                        <complexType/>

                             <"element name="GetCustomerListByCountry>
                                          <"element name="Country>
                                                  <complexType>
                   </"attribute name="name" type="xsd:string>
                                                <complexType/>
                                                       <element/>
                                                          <element/>
                              <"element name="GetCustomerListResponse>
                                                      <complexType>
                                                      <sequence>
element name="GetCustomerListReturn" type="impl:Customer" >
                                                        </"maxOccurs="unbounded
                                                     <sequence/>
                                                     <complexType/>
                                               <"key name="custkey>
                       </"selector xpath="GetCustomerListReturn>
                                          </"field xpath="@ID>
                                                        <key/>
                                                       <element/>
                                                           <schema/>
                                                         <wsdl:types/>
                       <"wsdl:message name="GetCustomerListByCountryRequest>
   wsdl:part name="request" element="impl:GetCustomerListByCountry"></>
                                                                <wsdl:part
                                                        <wsdl:message/>
                      <"wsdl:message name="GetCustomerListByCountryResponse>
   wsdl:part name="response" element="impl:GetCustomerListResponse"></>
                                                                <wsdl:part
                                                      <wsdl:message/>
                                        <"wsdl:portType name="CustomerType>
                                  <"wsdl:operation name="GetCustomerList>
       wsdl:documentation>Gets Information on ClubDemo Customers</>
                                                       <wsdl:documentation
       </"wsdl:input message="impl:GetCustomerListByCountryRequest>
     </"wsdl:output message="impl:GetCustomerListByCountryResponse>
                                                      <wsdl:operation/>
                                                          <wsdl:portType/>
                <"wsdl:binding name="GetCustomer" type="impl:CustomerType>
      </"soap:binding transport="http://schemas.xmlsoap.org/soap/http>
                                  <"wsdl:operation name="GetCustomerList>
    soap:operation soapAction="http://ws.myexample.com/ClubDemo/" >
                                                         </"style="document
                                                      <wsdl:input>
                                        </"soap:body use="literal>
                                                       <wsdl:input/>
                                                       <wsdl:output>
                                        </"soap:body use="literal>
                                                      <wsdl:output/>
                                                      <wsdl:operation/>
                                                          <wsdl:binding/>

                                     <"wsdl:service name="CustomerService>
                   <"wsdl:port name="Customer" binding="impl:GetCustomer>
       </"/soap:address location="http://ws.myexample.com/ClubDemo>
                                                          <wsdl:port/>
                                                          <wsdl:service/>
```

```
<wsdl:definitions/>
```

Mapping Rules for Web Services 6.6.4

The Web Service driver uses the same table and column mapping rules as the XML driver. The driver also .supports the following, specific rules to web services

Qualifiers

The Data Access layer can connect to one web service at a time. The service is mapped to the database .qualifier. In the ClubDemo example, qualifier name is `CustomerService` service name

Owners

.The `port` attribute is mapped to the database owner. In the example, owner is `Customer`

Tables

In the Data Access layer, every operation is represented as a root. Every output message represents a child .element of an operation. The Web Service driver exposes output messages as tables

Table names are the concatenation of the names of the operation, the output message, and the XML elements .(`/`) contained in the response, separated with a slash

Example

:In the ClubDemo example, the tables are the following

- `GetCustomerList/GetCustomerListByCountryResponse/GetCustomerListResponse`
- `GetCustomerList/GetCustomerListByCountryResponse/GetCustomerListResponse/GetCustomerListReturn`
- `GetCustomerList/GetCustomerListByCountryResponse/GetCustomerListResponse/GetCustomerListReturn/Name`
- `GetCustomerList/GetCustomerListByCountryResponse/GetCustomerListResponse/GetCustomerListReturn/Invoice`

Columns and Input Columns

.The XML mapping rules for columns also apply to web services

The Web Service driver only accepts tables with a single row as input messages. Each entry of that table is mapped to an input column of the result table. The driver maps all input messages, even if they are defined as .optional in the WSDL document

! Restriction

.The driver does not support `any` and `anyAttribute` in input columns

In the following examples, the `GetCustomerListByCountryRequest/GetCustomerListByCountry` column is an input column. The other column names result from the mapping rules of XML elements. See the .XML driver section for more information

Example

The columns of the `GetCustomerList/GetCustomerListByCountryResponse/GetCustomerListResponse` table are the following:

- `id-`
- `GetCustomerListByCountryRequest/GetCustomerListByCountry`

Example

The columns of the `GetCustomerList/GetCustomerListByCountryResponse/GetCustomerListResponse/GetCustomerListReturn` table are the following:

- `Age`
- `Address`
- `ZIP`
- `City`
- `Country/@name`
- `ID@`
- `GetCustomerListResponse/-id-`
- `GetCustomerListByCountryRequest/GetCustomerListByCountry`

Example

The columns of the `GetCustomerList/GetCustomerListByCountryResponse/GetCustomerListResponse/GetCustomerListReturn/Name` table are the following:

- `id-`
- `Name`
- `type@`
- `GetCustomerListReturn/@ID-`
- `GetCustomerListByCountryRequest/GetCustomerListByCountry`

Example

The columns of the `GetCustomerList/GetCustomerListByCountryResponse/GetCustomerListResponse/GetCustomerListReturn/Invoice` table are the following:

- `id`
- `Invoice`
- `GetCustomerListReturn/@ID`
- `GetCustomerListByCountryRequest/GetCustomerListByCountry`

Primary Keys and Foreign Keys

The XML mapping rules for primary and foreign keys also apply to web services. In addition, an input column is always part of the definition of a primary key.

Restriction

Although data foundations expose foreign keys, the Web Service driver does not support JOIN operations.

Example

Primary Keys

The `-id` column of the `GetCustomerList/GetCustomerListByCountryResponse/GetCustomerListResponse` table is generated because the schema does not define any primary key.

The schema defines an explicit primary key for the `@ID` column of the `GetCustomerList/GetCustomerListByCountryResponse/GetCustomerListResponse/GetCustomerListReturn` table.

The `GetCustomerListByCountryRequest/GetCustomerListByCountry` input column is used as primary key.

Example

Foreign Keys

The `-GetCustomerListResponse/@ID` and `-GetCustomerListReturn/@ID` columns are built from the reverse path to the parent table and the primary key of the parent table.

Array Data Types

Web services support data types in the format of an array made of a series of primitive or complex types. An element of this type is mapped to a one-row table. It is mapped as part of column or table names as `-arrayElement`. The array data type does not define the element name and accepts any name.

See the link below for more information on array data types.

Example

Array Data Types

The `arrayType="xsd:int[2]"` is a data type of an element that has two occurrences and whose value is an integer. For example, the following complex type applies to the `CustomerIDs` element and defines it as parent of a `CustomerID` element that accepts integer values:

```
<"complexType name="ArrayOfIntegers>
<complexContent>
<"restriction base="soapenc:Array>
</"[attribute ref="soapenc:arrayType" wsdl:arrayType="xsd:int[2>
<restriction/>
<complexContent/>
<complexType/>
<"element name="CustomerIDs" type="ArrayOfIntegers>
<CustomerID>103</CustomerID>
<CustomerID>204</CustomerID>
<element/>
```

Related Information

Details on arrays in SOAP 1.1 note

[101 XML Driver - Mapping Columns [page
[103 XML Driver - Mapping Primary and Foreign Keys [page

6.6.5 Web Service Driver - Configuring Column Maximum Size

Like the XML driver, the Web Service driver also uses the `Binary Max Length`, `Integer Max Length` and `String Max Length`. parameters in the `cs.cfg` file to deal with large values of these data types

Related Information

[192 Binary Max Length [page
[199 Integer Max Length [page
[204 String Max Length [page

Local Disk Used as a Cache for Sorting Operations 6.7

The CSV OpenDriver and the OData, SAP ERP, XML and Web Service drivers can use the local disk as a cache .for sorted rows

:The data access drivers perform the sorting operations (ORDER BY, GROUP BY and DISTINCT) as follows

- In the main memory if there is a small amount of data to be sorted
- By writing the data in a temporary directory on the local disk

The sorted rows are written on the disk either when the free main memory is too small, or when the number of .rows defined using the `Bucket Split Size` SBO parameter is reached

The local disk is used as a cache and the data is written in the default temporary folder of your machine. You can configure the directory path in the `cs.cfg` file using the `Temp Data Dir` parameter when the operating .system does not specify a temporary folder

Related Information

[70 CSV OpenDriver [page
[76 OData Driver [page
[89 SAP ERP Driver [page
[96 XML Driver [page
[109 Web Service Driver [page
[192 Bucket Split Size [page
[205 Temp Data Dir [page

Connection Reference 7

HIVE and Impala Connections 7.1

The following sections describe how to create connections to HIVE and Impala databases. In this release, you .can create connections to different versions of the HIVE and Impala databases simultaneously

To Create JDBC Connection to Apache Hadoop HIVE 7.1.1

The Data Access layer allows the BI platform to connect to the Apache Hadoop HIVE 0.7.1, 0.8.0, 0.9.0, 0.10, .0.12 and 0.13 databases through JDBC on all platforms

> **i Note**
>
> - HiveServer1 is supported on Apache Hadoop HIVE 0.7.1, 0.8.0, 0.9.0, 0.10 and 0.12
> - HiveServer 2 is supported only on Apache Hadoop HIVE 0.13
> - Apache Hadoop Hive driver does not support complex data types

1. To create a connection to the Apache Hive Server, place the following sets of JAR files in the `<connectionserver-install-dir>\connectionServer\jdbc\drivers\<hadoop_version>` .directory, where `<hadoop_version>` is `hive07`, `hive08`, `hive09` or `hive010` and, `hive012`

JAR Files	Apache Hadoop HIVE Database Version

`hadoop-0.20.1-core.jar` or `hadoop-core-0.20.2.jar`
`hive-exec-0.7.1.jar`
`hive-jdbc-0.7.1.jar`
`hive-metastore-0.7.1.jar`
`hive-service-0.7.1.jar`
`libfb303.jar`
`log4j-1.2.16.jar`
`commons-logging-1.0.4.jar`
`slf4j-api-1.6.1.jar`
`slf4j-log4j12-1.6.1.jar`
	0.7.1

`hadoop-0.20.1-core.jar` or `hadoop-core-0.20.2.jar`
`hive-exec-0.8.0.jar`
`hive-jdbc-0.8.0.jar`
`hive-metastore-0.8.0.jar`
`hive-service-0.8.0.jar`
`libfb303.jar`
`log4j-1.2.16.jar`
`commons-logging-1.0.4.jar`
`slf4j-api-1.6.1.jar`
`slf4j-log4j12-1.6.1.jar`
	0.8.0

JAR Files	Apache Hadoop HIVE Database Version
hadoop-0.20.1-core.jar or hadoop-core-0.20.2.jar hive-exec-0.9.0.jar hive-jdbc-0.9.0.jar hive-metastore-0.9.0.jar hive-service-0.9.0.jar libfb303.jar log4j-1.2.16.jar commons-logging-1.0.4.jar slf4j-api-1.6.1.jar slf4j-log4j12-1.6.1.jar	0.9.0
hadoop-0.20.1-core.jar or hadoop-core-0.20.2.jar hive-exec-0.10.0.jar hive-jdbc-0.10.0.jar hive-metastore-0.10.0.jar hive-service-0.10.0.jar libfb303.jar log4j-1.2.16.jar commons-logging-1.0.4.jar slf4j-api-1.6.1.jar slf4j-log4j12-1.6.1.jar	0.10.0
commons-logging-1.1.1.jar hadoop-core-1.2.1.jar hive-exec-0.12.0.jar hive-jdbc-0.12.0.jar hive-metastore-0.12.0.jar hive-service-0.12.0.jar libfb303-0.9.0.jar log4j-1.2.16.jar slf4j-api-1.6.1.jar slf4j-log4j12-1.6.1.jar	0.12.0

JAR Files	Apache Hadoop HIVE Database Version
hive_metastore.jar hive_service.jar HiveJDBC4.jar libfb303-0.9.0.jar libthrift-0.9.0.jar log4j-1.2.14.jar ql.jar slf4j-api-1.5.8.jar slf4j-log4j12-1.5.8.jar TCLIServiceClient.jar	(Simba JDBC4) 0.12
hive_metastore.jar hive_service.jar HiveJDBC4.jar libfb303-0.9.0.jar libthrift-0.9.0.jar log4j-1.2.14.jar ql.jar slf4j-api-1.5.8.jar slf4j-log4j12-1.5.8.jar TCLIServiceClient.jar	(Simba JDBC4) 0.13

JAR Files	Apache Hadoop HIVE Database Version
`HiveJDBC4.jar`	Amazon EMR 0.11
`hive_metastore.jar`	
`hive_service.jar`	
`libfb303-0.9.0.jar`	
`libthrift-0.9.0.jar`	
`log4j-1.2.14.jar`	
`ql.jar`	
`slf4j-api-1.5.8.jar`	
`slf4j-log4j12-1.5.8.jar`	
`TCLIServiceClient.jar`	

2. Run the connection wizard.
3. Select the Apache Hadoop HIVE driver version you want to use.
4. Use the wizard to configure the connection.

You have created a connection to the Apache Hadoop HIVE database.

i Note

- The connections created from the BI platform 4.1 continue to work in this release. The `Apache Hadoop HIVE` database name is an alias of `Apache Hadoop Hive 0.7`. The `hive` folder for JAR files is still supported.
- You need not perform any additional configuration to create a connection to `Apache Hadoop Hive 0.12 Simba JDBC4`, as, the drivers are installed as part of the BI platform in the `<connectionserver-install-dir>\connectionServer\jdbc\drivers\hive012simba4server1` directory.

Related Information

[56 JAR File Location Reference [page

To Create ODBC Connection to Apache Hadoop HIVE 7.1.2

The Data Access layer allows BI platform to connect to the Apache Hadoop HIVE 0.12 and 0.13 databases through ODBC using SAP Hive ODBC Driver on all supported platforms. After BOE client or server installation, you need to update the host and port number details. For more information, refer `Simba guide`.

> **i Note**
>
> - *HiveServer2* is supported only on Apache Hadoop HIVE 0.13. You must choose *Hive Server2* as *Hive Server Type* in ODBC Data Source Administrator
> - Refer to the `Simba guide` to check for the authentication modes for further details

Windows System

> **i Note**
>
> - SAP Hive ODBC Driver is the driver that must be used to create DSN
> - `Sample SAP Hive DSN` is the Sample DSN found in the *ODBC Data Source Administrator*, refer this for further configuration assistance
> - If you select `Sample SAP Hive DSN` for ODBC connectivity, possible values for `<Platform>` is (`win32_x86`(BOE Client) or `win64_x64`(BOE server
> - The driver specific libraries are present in the path: `<BIP_INSTALL_DIR>\<Platform>\odbc\simbahive\2.0\lib`
> - Simba ODBC Driver for `Hive Install Guide.pdf` is found in the path: `<BIP_INSTALL_DIR>\<Platform>\odbc\simbahive\2.0\help` for further configuration steps

UNIX System

After installation, you can find SAP Hive ODBC driver specific libraries in the path: `<install_directory>/sap_bobj/enterprise_xi40/<Platform>/odbc/simbahive/2.0/lib`

> **i Note**
>
> - Till Hive 0.13 and Amazon EMR hive 0.11, the path for the SAP Hive ODBC driver specific libraries is: `<install_directory>/ sap_bobj/enterprise_xi40/<Platform>/odbc/simbahive/1.0/lib`
> - After the installation of 4.1SP07, the path for the libraries must be changed manually in all the configuration files as mentioned in the below section.

Hive ODBC configuration on UNIX System

After installation, you can find SAP ODBC HiveDSN entries is present in `simba.hiveodbc.ini`. The following information helps you to configure on UNIX system:

- To change the *Host* and *Port* number, `ODBCInstLib` information, you need to configure the `simba.hiveodbc.ini`. For more information on how to do modification on `simba.hiveodbc.ini`, see `Simba ODBC Driver for Hive Install Guide.pdf`
- You can find `simba.hiveodbc.ini` in the path: `<install_directory>/sap_bobj/enterprise_xi40`
- You can set the environment variables `SIMBAINI`, `ODBCINI` to the path where `simba.hiveodbc.ini` file (inclusive of filename) is present.
  For example: `export SIMBAINI=<install_directory>/sap_bobj/enterprise_xi40/simba.hiveodbc.ini`
- Driver libraries path: `<install_directory>/sap_bobj/enterprise_xi40/linux_x64/odbc/simbahive/2.0/lib`, must be set to the environment variables `LD_LIBRARY_PATH` (LINUX), `LIBPATH` (AIX).
- The Simba ODBC Driver for `Hive Install Guide.pdf` can be found in the location: `<install_directory>/sap_bobj/enterprise_xi40/<Platform>/odbc/simbahive/1.0/help`

To Make HIVE Connections Work After Platform Update 7.1.3

As a prerequisite, your production environment runs an SAP BusinessObjects BI platform 4.0 release up to .Support Package 8 on a Microsoft Windows or UNIX operating system

After the update of the platform servers or client tools to a 4.1 release, the Apache Hadoop HIVE driver has been uninstalled. You must modify the installation of the platform to make Apache Hadoop HIVE connections .work

.The following procedure shows the steps to perform on Microsoft Windows

.In the Control Panel, locate the latest full installation program of the BI platform .1

> → Remember
>
> .You cannot perform the next step on a program update of the platform

.Right-click and select *Uninstall/Change* .2

In the *Application Maintenance* screen of the *SAP BusinessObjects BI platform setup* dialog box, select .3 .*Modify* and click *Next*

.In the *Select Features* screen, select the *Hadoop HIVE* option under *Database Access and Security* .4

.Click Next and complete the installation .5

You have installed the Apache Hadoop HIVE driver on the platform. You can now create connections to the .HIVE databases

To Create JDBC Connection to Amazon EMR HIVE 7.1.4

The Data Access layer allows BI platform to connect to the Amazon Elastic MapReduce (EMR) HIVE 0.7,0.8 and .0.11 databases through JDBC on all platforms

.Set up an SSH tunnel to the Amazon master node .1

.See the Amazon documentation for more information

Download the required JAR files from the Amazon website and place them in the `<connectionserver-install-dir>\connectionServer\jdbc\drivers\<emrhive_version>` directory, where .2 .`<emrhive_version>` is either `emrhive07` or `emrhive08`

.In the connection wizard, specify **`localhost`** for server and **`10002`** for port in the *Server (host:port)* field .3

.You have created a connection to the Amazon EMR HIVE database

> ℹ Note
>
> - The connections created from the BI platform 4.1 continue to work in this release. The `Amazon EMR HIVE` database name is an alias of `Amazon EMR Hive 0.7`. The `hive` folder for JAR files is still .supported

- *HiveServer1* is the only supported for Amazon EMR Hive 0.11

Related Information

Creating an SSH tunnel to the master node
HIVE 0.7.1 JAR file download website
HIVE 0.8.1 JAR file download website
[56 JAR File Location Reference [page

To Create ODBC Connection to Amazon EMR HIVE 7.1.5

The Data Access layer allows BI platform to connect to the Amazon EMR Hive 0.11 databases through ODBC using SAP Hive ODBC Driver on all supported platforms. After BOE client or server installation, you need to .update the host and port number details. For more information, refer to the Simba guide

> **i Note**
>
> *HiveServer1* is the only server supported for Amazon EMR Hive 0.11. You must choose *Hive Server1* as *Hive .Server Type* in ODBC Data Source Administrator

Windows System

`Sample Amazon EMR Hive DSN` is the Sample DSN found in the *ODBC Data Source Administrator*, refer to .this for further configuration assistance

UNIX System

For Hive ODBC configuration on UNIX System, see To Create ODBC Connection to Apache Hadoop HIVE [page .122] section

To Create JDBC Connection to Cloudera Impala 7.1.6

The Cloudera Impala 1.0 Simba JDBC4 drivers are installed as part of the BI platform in the <connectionserver-install-dir>\connectionServer\jdbc\drivers\impala10simba4 directory. You need not perform any additional .configuration to create a connection to the Cloudera Impala database

:The following are the JAR files supported for Impala 1.0 database

JAR Files	Cloudera Impala Database Version
hive_metastore.jar	(Impala 1.0 (Simba JDBC4
hive_service.jar	
ImpalaJDBC4.jar	
libfb303-0.9.0.jar	
libthrift-0.9.0.jar	
log4j-1.2.14.jar	
ql.jar	
slf4j-api-1.5.8.jar	
slf4j-log4j12-1.5.8.jar	
TCLIServiceClient.jar	

To Create ODBC Connection to Cloudera Impala 7.1.7

In this release, we are supporting SAP Impala ODBC drivers. After BOE client or server installation, you need to change the host and port number details to connect to the corresponding Impala server. For more information, see Simba guide.

Note

- Refer to `Simba guide` to check for the authentication modes and perform the required changes
- The `Sample SAP Impala DSN` is found in the *ODBC Data Source Administrator*
- You can find libraries for ODBC drivers in the path: `<BIP_INSTALL_DIR>\<Platform>\odbc\simbaimpala\1.0` , possible values for <Platform> is `win32_x86`(BOE Client) or `win64_x64`(BOE server).
- The driver specific libraries are present in the path: `<BIP_INSTALL_DIR>\<Platform>\odbc\simbaimpala\1.0\lib`
- `Simba ODBC Driver for Impala Install Guide.pdf` is found in the location: `<BIP_INSTALL_DIR>\<Platform>\odbc\simbaimpala\1.0\help`

Impala ODBC configuration on UNIX System

- To change the *Host* and *Port* number, `ODBCInstLib` information, you need to configure the `simba.impalaodbc.ini`. For more information on how to modify the `simba.impalaodbc.ini`, see `Simba ODBC Driver for Impala Install Guide.pdf`
- You can find driver specific libraries for ODBC drivers in the path: `<install_directory>/sap_bobj/enterprise_xi40/<Platform>/odbc/simbaimpala/1.0/lib`
- (Driver libraries must be set to the environment variables `LD_LIBRARY_PATH` (LINUX), `LIBPATH`(AIX
- You can find the `simba.impalaodbc.ini` in the path: `<install_directory>/sap_bobj/enterprise_xi40/simbaimpala/conf`

- Set the environment variables `SIMBAINI`, `ODBCINI` to the path where `simba.impalaodbc.ini` file (inclusive of filename) is present.
  For example: `export SIMBAINI= <install_directory>/sap_bobj/enterprise_xi40/simbaimpala/conf/simba.impalaodbc.ini`
- `Simba ODBC Driver for Impala Install Guide.pdf` is found in the path: `<install_directory>/sap_bobj/enterprise_xi40/<Platform>/odbc/simbaimpala/1.0/help`

IBM DB2 Connections - Reference Keys Mapped to Null 7.2

! Restriction

Due to a database driver restriction, reference key names of IBM DB2 10 for z/OS database tables are mapped to NULL.

IBM DB2 Update 7.2.1

Updated.

- IBM DB2 can be used on Linux, Unix, and Windows 11.1.
- IBM DB2 version 12 can be used on z/OS

IBM Informix Connections 7.3

The following sections describe the actions to perform when problems with IBM Informix connections happen.

Related Information

[128 To Set the JVM Timezone for IBM Informix Connections [page
[128 To Set the Transaction Mode for IBM Informix Connections [page

7.3.1 To Set the JVM Timezone for IBM Informix Connections

In the information design tool, queries to IBM Informix Dynamic Server 11 using JDBC may return wrong date type values if the client tool and server are located in different timezones. To avoid this problem, you must set .the timezone value of the JVM to the same timezone set at the database server level

.Exit the information design tool .1

.Go to the `<bip-install-dir>\win32_x86` directory .2

.Open the `InformationDesignTool.ini` for editing .3

:Add the following line at the end of the file .4

```
<Duser.timezone=<server_timezone_value-
```

.where `<server_timezone_value>` is the timezone value set on the database server. For example: `GMT`

.Save the file .5

.Restart the application .6

.When you complete this task, connections to an IBM Informix database using JDBC are properly configured

7.3.2 To Set the Transaction Mode for IBM Informix Connections

The Data Access layer allows SQL operations to be run as a transaction block by default. If the Informix Dynamic Server does not support transactions, you may expect connection failure. To avoid this problem, .specify in the driver configuration file that the transaction mode is not available

.Exit the client tool .1

.Open the `informix.sbo` file for editing .2

.It is located in the `<connectionserver-install-dir>\connectionServer\jdbc` directory

:Add the following line under the appropriate `Database` section .3

```
<Parameter Name="Transactional Available">No</Parameter>
```

.Save the file .4

.Restart the service and application .5

.When you complete this task, connections to IBM Informix are properly configured

Related Information

[206 Transactional Available [page

MaxDB 7.9 7.4

The Data Access layer provides a new driver for connecting SAP BusinessObjects applications to MaxDB 7.9 .data sources

Microsoft Excel, Access 2016 7.5

The Data Access layer provides a new driver for connecting SAP BusinessObjects applications to Microsoft .Excel and Access 2016 data sources

Microsoft Parallel Data Warehouse (PDW) 2016 7.6

The Data Access layer provides a new driver for connecting SAP BusinessObjects applications to Microsoft .(Parallel Data Warehouse (PDW) 2016 data sources (JDBC connections only

Microsoft Analysis Services Connections 7.7

⚠ Caution

.Connections to Microsoft Analysis Services through XMLA do not use Connection Server

.This section only relates to connections to be created in the information design tool

In the information design tool, users can create connections to Microsoft Analysis Services over HTTP through .an XMLA driver

To configure these connections, you first need to enable the HTTP access. For more information, refer to the .Microsoft TechNet website

Related Information

http://technet.microsoft.com/en-us/library/cc917711.aspx
http://technet.microsoft.com/en-us/library/cc917712.aspx

Microsoft SQL Server Connections 7.8

.The following sections provide information for Microsoft SQL Server connections

Related Information

[130 Synonym Support for OLE DB Connections to Microsoft SQL Server [page
[131 To Set the JVM Options for Connections to Microsoft SQL Server on UNIX [page

Synonym Support for OLE DB Connections to Microsoft SQL Server 7.8.1

.Synonym columns do not display in reporting tools

Microsoft SQL Server Native Client middleware does not support metadata of Synonym columns. Consequently, Synonym columns from the Microsoft SQL Server database do not display in the universe .design tool or information design tool when connecting through OLE DB

Related Information

(SQL Server Native Client (OLE DB

To Set the JVM Options for Connections to Microsoft SQL Server on UNIX 7.8.2

After you install the JDBC driver for Microsoft SQL Server on UNIX and configure the `jdbc.sbo` file, you set the .JVM information in the `cs.cfg` file

.Open the `cs.cfg` file for editing .1

:Add the following file path to the `JavaVM` section in order to overwrite the default JVM configuration .2

```
LibraryName JNIVersion="JNI_VERSION_1_4">$BOBJEDIR/jdk/jre/lib/i386/server/>
<libjvm.so</LibraryName
```

:Add one of the following options to the `JavaVM` section .3

Option	Description

Solaris or Linux	`<Options>`
	`<Option>-Xmx512m</Option>`
	`<Options/>`

AIX	`<Options>`
	`<Option>-Xmx511m</Option>`
	`<Options/>`

> **i Note**
>
> You can allow 512 MB or higher to the Java Virtual Machine on Solaris or Linux, but no more than 511 .MB on AIX

.Save the file .4

Related Information

[166 JVM Settings [page

Oracle 12c R2 7.9

The Data Access layer provides a new driver for connecting SAP BusinessObjects applications to Oracle 12c R2 .data sources

Oracle Connections 7.10

.The following sections provide configuration information for Oracle connections

Related Information

[132 Connections to Clusters of Oracle Servers [page
[132 To Set the Oracle CURSOR_SHARING Parameter Value [page

Connections to Clusters of Oracle Servers 7.10.1

Connections to clusters of Oracle servers that work in failover mode is supported through JDBC. The driver chooses one of these servers, and if it is not available, the next server is used. A connection error raises if all .servers are unavailable

In the connection wizard, enter the server host and port separated by a semi-colon in *Server(s) (host:port{,host:port})* to create a JDBC connection. Enter information for either one server or multiple servers .if you want to take advantage of the failover mechanism

To Set the Oracle CURSOR_SHARING Parameter Value 7.10.2

The databases Oracle 10 and higher use the `CURSOR_SHARING` parameter. The BI platform and SAP .BusinessObjects reporting tools support only the `EXACT` value for `CURSOR_SHARING`

.If you use the `FORCE` value, this may cause some performance issues of the reporting tools

:Do one of the following

Option	Description
To set the `CURSOR_SHARING` value to the universe connection	.1 .Open the universe connection for editing .2 .Click *Next* to go to the *Custom Parameters* screen .3 .Click *Add Parameter* .4 .Enter **`ConnectInit`** and click *OK*

Option	Description
	5. Enter "`alter session set CURSOR_SHARING=EXACT`" as `ConnectInit` value. 6. Click *Finish*.
To set the `CURSOR_SHARING` value to all Oracle connections	1. Browse to the directory that stores the `oracle.prm` file: `<connectionserver-install-dir>\connectionServer\Oracle`. 2. Open the file in an XML editor. 3. Under the `Configuration` section, add the following parameter: `<Parameter Name="CURSOR_SHARING">EXACT</Parameter>` 4. Save the file. 5. Restart the connectivity and reporting services from the CMC.

> **Note**
>
> For the definition of `CURSOR_SHARING`, see the Oracle documentation.

7.10.3 MySQL Connections - Database Privileges Needed for Some Workflows in the Information Design Tool

When working with a universe in the information design tool based on a MySQL JDBC connection, if the data foundation includes a table based on a view in the MySQL database, the user needs the `SHOW VIEW` or equivalent privilege granted in the database on this view.

If the privilege is not granted, the information design tool user may receive a database exception (`SHOW VIEW` command denied) when doing certain workflows, for example showing values or detecting keys.

7.10.4 Using Oracle JDBC Connections in the Information Design Tool in Norwegian Bokmål Interface Language

To use Oracle JDBC connections in the information design tool when using the interface language Norwegian Bokmål, you need to set the default locale by making the following changes to the `InformationDesignTool.ini` file.

1. Exit the information design tool.
2. In the directory `<BIP_INSTALL_DIR>\SAP BusinessObjects Enterprise XI 4.0\win32_x86\`, find the `InformationDesignTool.ini` file and open it in an editor.

> **Note**
>
> .Replace `<BIP_INSTALL_DIR>` with the directory path where the BI platform is installed

.3 .Add the following lines to the `InformationDesignTool.ini` and save the file

```
Duser.language=nb-
Duser.country=NO-
```

.4 .Restart the information design tool

.5 :Perform the following steps in the information design tool to set the product language to the *Default Locale*

.a .From the information design tool main menu, select *Window* > *Preferences*

.b .In the *Preferences* dialog box, expand the *Information Design Tool* node and select *Languages*

.c .Select *Default Locale* from the *Product Languages* list

The *Default Locale* should be *(Norwegian Bokmål (Norway))*. Make sure you don't select the Product .Language *Norwegian Bokmål*

.d .Click *OK*

.6 .Exit and restart the information design tool for the language change to take effect

Oracle EBS Connections 7.11

The Data Access layer provides a new driver for connecting SAP BusinessObjects applications to Oracle E-Business Suite (EBS) through Oracle Call Interface (OCI). It allows applications to access data from EBS views .and stored procedures. You can only use OCI to connect the driver to Oracle EBS

When creating a connection in the universe design tool or information design tool, you first choose the authentication mode, which is either user-supplied if the application user provides user name and password when logging in to the BI platform, or single sign-on if the user logs in with Oracle EBS credentials. You then choose the Oracle EBS application, responsibility and security group, which define the data source of your .universe

The BI platform provides SSO for Oracle EBS with the help of an authentication plugin. SSO is enabled when the plugin is installed and configured properly. SSO allows the application user to login into the BI launch pad with Oracle EBS credentials. Same credentials are used by Connection Server to access Oracle EBS data source. For more information about the authentication plugin, refer to *SAP BusinessObjects Business .Intelligence platform Administrator Guide*

Oracle Essbase Connections 7.12

.The Data Access layer allows the BI platform to access the Oracle Essbase data source

.Connections to Oracle Essbase are OLAP connections

You can create `.unv` universes based on Oracle Essbase 9 or 11 through the Essbase Client middleware on 32-bit Microsoft Windows or a 64-bit UNIX operating system . These connections work with 32-bit or 64-bit Connection Server. On 64-bit Microsoft Windows, the Data Access layer allows you to work with 32-bit .Connection Server. See the *64-bit Microsoft Windows Support* section

You can create `.unx` universes based on Oracle Essbase 11 through ESSJAPI or the Native API in a 32-bit or 64-.bit environment. These connections work with the OLAP Client

> ⚠ Caution
>
> Because of the restriction in the ESSJAPI middleware for `.unv` universes, a specific deployment of the BI platform server is required to support both `.unv` and `.unx` universes based on Oracle Essbase 11. To deploy a server that supports both `.unv` and `.unx` Essbase universes, configure a system with the two :following clusters on two separate machines
>
> - In a 64-bit environment, install the following software on the first cluster (Cluster1): the 64-bit BI platform, the Central Management Server, Web Intelligence servers, a 64-bit Connection Server, and .all the 64-bit middleware drivers
> - In a 32-bit environment, install the following software on the second cluster (Cluster2): the 32-bit Connection Server, and the 32-bit middleware drivers (including the 32-bit Essbase driver for `.unv` .(universes
>
> At runtime, Connection Server uses Cluster2 for `.unv` universes. The OLAP Client, which serves `.unx` .universes, uses the 64-bit middleware available in Cluster1

Related Information

[28 bit Microsoft Windows Support [page-64

Oracle Exadata 12 7.13

The Data Access layer provides a new driver for connecting SAP BusinessObjects applications to Oracle .Exadata 12 data sources

Oracle RAC Connections 7.14

The Data Access layer allows the BI platform to connect to Oracle Real Application Clusters (RAC) through .JDBC

To create a connection from your application using the connection wizard, you need to provide the Oracle RAC :data source entry, which has the following format

```
<host>:<port>,<host>:<port>,...,<host>:<port>
```

.The number of host and port pairs depends on the number of machines involved in the cluster

Example

```
pmrac1.us.oracle.com:1521,pmrac2.us.oracle.com:1521
```

Progress OpenEdge 11.6 7.15

The Data Access layer provides a new driver for connecting SAP BusinessObjects applications to Progress .OpenEdge 11.6 data sources

Salesforce.com Connections 7.16

To Configure the Environment 7.16.1

You must first configure your environment to make salesforce.com connections work either in the universe .design tool or in the information design tool

1. .Stop the Connectivity Service from the CMC and the client application
2. .Run `regedit.exe` in the Microsoft Windows command line to open the Registry Editor
3. Go to the Salesforce ODBC data source under *HKEY_LOCAL_MACHINE* > *SOFTWARE* > *ODBC* > *ODBC.INI* > `<SALESFORCE_DSN_NAME>`, where `<SALESFORCE_DSN_NAME>` is the salesforce.com data .source name
4. .Right-click the data source name and select *New* > *String Value*
5. .Enter **`CheckJVMChanged`**
6. .Double-click the property and enter **`0`**
7. .Close the Registry Editor

.You must then follow the steps below to complete the configuration

Related Information

[137 To Make salesforce.com Connections Work in the Information Design Tool [page
[137 To Make salesforce.com Connections Work in the Universe Design Tool [page

7.16.2 To Make salesforce.com Connections Work in the Information Design Tool

.Exit the information design tool .1

Copy the `sforce.jar` driver file to the `<bip-install-dir>\win32_x86\jdk\jre6\lib\ext` .directory .2

.Go to the `<bip-install-dir>\win32_x86` directory .3

.Open the `InformationDesignTool.ini` for editing .4

:Add the following line at the end of the file .5

```
Dosgi.parentClassloader=ext-
```

.Save the file .6

.Restart the application .7

.When you complete this task, connections to salesforce.com are properly configured

7.16.3 To Make salesforce.com Connections Work in the Universe Design Tool

.Exit the universe design tool .1

.Open the `cs.cfg` file for editing .2

:In the `JavaVM` section, add the following path .3

```
<ClassPath>
Path>C:\Program Files (x86)\Progress\DataDirect\Connect_for_ODBC_61\java>
<\lib\sforce.jar</Path
<ClassPath/>
```

.Save the file .4

.Open the `openaccess.sbo` file for editing .5

.It is located in the `<connectionserver-install-dir>\connectionServer\odbc` directory

:Add the following line under the `Database` section .6

```
<Parameter Name="Transactional Available">No</Parameter>
```

.Save the file .7

.Restart the service and application .8

.When you complete this task, connections to salesforce.com are properly configured

Related Information

[206 Transactional Available [page

7.16.4 To Create Simba JDBC Connection in Information Design Tool

The Data Access layer allows BI platform to connect to the Salesforce.com databases through JDBC on all .platforms

While installing BI Platform, the salesforce jar get saved at `<connectionserver-install-dir>` .1 `.\connectionServer\jdbc\drivers\salesforce` directory

In the connection wizard, enter the following details: **`User Name`** in *User Name* field, **`Password`** in .2 *Password* field, **`Proxy Address`** in *Proxy Address* field , **`Proxy User Name`** in *Proxy User Name* field and .**`Proxy Password`** in *Proxy Password* field

.You have created a connection to the Salesforce.com database

7.16.5 To Create Simba ODBC Connection in Information Design Tool

The Data Access layer allows BI platform to connect to the Salesforce.com databases through ODBC using SAP .Salesforce ODBC Driver on all supported platforms

Windows System 64 Bit

`Sample SAP Salesforce DSN` is the Sample DSN found in the *ODBC Data Source Administrator*, refer to this .for further configuration assistance

UNIX System

For Salesforce.com ODBC configuration on UNIX System, see `Simba ODBC Driver for Salesforce` .`Install Guide.pdf` and `Simba-Salesforce-ODBC-Driver-Quickstart.pdf`

> **i Note**
>
> `Simba ODBC Driver for Salesforce Install Guide.pdf` and `Simba-Salesforce-ODBC-` .`Driver-Quickstart.pdf` are shipped along with the product

SAP Business Warehouse Connections 7.17

.The Data Access layer allows the BI platform to access the SAP BW data source

.Connections to SAP BW through BAPI are OLAP connections

This present release allows you to create `.unv` universes based on SAP BW on 32-bit or 64-bit Microsoft .Windows, and 64-bit UNIX flavors

SAP BW connections can work either with 32-bit Connection Server for 32-bit operating systems or with 64-bit .Connection Server for 64-bit operating systems

To Enable SAP BW 64-bit Connections 7.17.1

.You can use SAP BW connections with a 64-bit Connection Server to build `.unv` universes

.You can install the SAP BW 64-bit driver on an SAP BusinessObjects BI platform on 64-bit Microsoft Windows

:Follow the steps below according to the type of installation you perform

- .If you perform a full installation of this release, SAP BW connections will use the 64-bit Connection Server
- If you perform a patch installation over an existing platform, SAP BW connections will continue to use the :32-bit Connection Server. To use the 64-bit Connection Server, modify the installation of the platform

a. .In the Control Panel, locate the latest full installation program of the BI platform

> → Remember
>
> .You cannot perform the next step on a program update of the platform

b. .Right-click and select *Uninstall/Change*

c. In the *Application Maintenance* screen of the *SAP BusinessObjects BI platform setup* dialog box, select .*Modify* and click *Next*

d. .In the *Select Features* screen, select the *SAPBW64* option under *Database Access*

e. .Click *Next* and complete the installation

You have installed the SAP BW 64-bit driver on the platform. You can now create SAP BW connections that use .the 64-bit Connection Server on 64-bit Microsoft Windows

SAP ERP Connections - Driver Failed to Load 7.18

:The following error message may appear in SAP BusinessObjects Web Intelligence

```
:Database error: (CS) "Java Exception : java.lang.NoClassDefFoundError
```

```
com/sap/bip/jco/JCoManager : cannot initialize class because prior
                                        "initialization attempt failed
```

It means the SAP ERP driver fails to load, because the Web Intelligence Processing Server cannot find the .`sapjco3.dll` file

To make SAP ERP connections work, you must copy the file from the BI platform server directory (`<bip-install-dir>\win64_x64`) to the Microsoft Windows directory (`C:\WINDOWS\system32`). You then restart .the Web Intelligence Processing Server

SAP HANA Connections 7.19

The Data Access layer allows the BI platform to connect SAP HANA database 1.0 SPS 08 using ODBC and JDBC on all platforms. The present release also supports OLAP connections to the SAP HANA database on .Microsoft Windows, Linux and AIX

Array Fetch Size

.The `Array Fetch Size` default value is `1000` for SAP HANA connections

> ⚠ Caution
>
> Because a high number for `Array Fetch Size` requires more memory, this configuration may affect .your system performance

Failover

Connections to clusters of SAP HANA servers that work in failover mode are supported through ODBC and JDBC. The driver chooses one of these servers, and if it is not available, the next server is used. A connection .error occurs if all servers are unavailable

Preferred Viewing Locale

SAP HANA connectivities support Preferred Viewing Locale (PVL) for all authentication modes through JDBC .and ODBC. The PVL allows the user to retrieve localized data if the database stores data in different languages

Single sign-on to database

The BI platform provides single sign-on (SSO) to database using either Windows AD with Kerberos or the SAML protocol on Microsoft Windows and Linux platforms. SSO with Kerberos is available for JDBC and ODBC .connections. SSO with SAML is available in JDBC, but not in ODBC

If both Kerberos and SAML implementations are available in your environment, the platform uses SAML in priority. If any problem occurs using SAML, the platform uses Kerberos instead. This logic is transparent to the application user. To deactivate the use of SAML, set the `Skip SAML SSO` parameter to `True` in the appropriate `.newdb.sbo` configuration file.

The BI platform also provides SSO to database using either Windows AD with Kerberos or the SAML protocol in .OLAP connections

Once users are logged on to the BI platform from an SAP BusinessObjects application, they can perform actions that require database access, such as refreshing Web Intelligence documents, without providing their .database credentials

UNIX support

Starting from the 4.1 release, the Data Access layer allows the BI platform to connect to the SAP HANA .database through ODBC on 64-bit UNIX platforms

Use of SSL

.Relational and OLAP connections to SAP HANA can use the SSL protocol

Related Information

[202 Skip SAML SSO [page

Creating an SAP HANA Connection 7.19.1

Creating a JDBC Connection

The SAP HANA 1.0 SPS 08 JDBC drivers are installed as part of the BI platform in the `<connectionserver-install-dir>\connectionServer\jdbc\drivers\newdb` directory. Consequently, you do not need to .perform any additional configuration to create a connection to the SAP HANA database

:Select one of the following options in the connection wizard to create a JDBC connection

- *Single Server*
  .Enter the HANA host name and instance number in the *Host Name* and *Instance Number* fields
- *(Multiple Servers (Failover*
  Enter the server host and port separated by a semi-colon in *Server (host:port{;host:port})*. Enter information for either one server or multiple servers if you want to take advantage of the failover .mechanism

:The convention for port number is as follows

```
3##15
```

.where ## is the HANA instance number

> **Example**
>
> If you are connecting to instance `0`, type either the instance number `00` or the port number `30015` in the .wizard. If you are connecting to instance `1`, type either the instance number `01` or the port number `30115`

Using SSL

Select *Use SSL* in the connection wizard to create an OLAP or JDBC connection that is using the SSL protocol .to connect to the SAP HANA server

> **Note**
>
> To use SSL in ODBC on Microsoft Windows, open the ODBC Data Source Administrator and select *SSL* .when you configure the DSN

Related Information

[52 Creating JDBC Connections [page

Editing an SAP HANA Connection 7.19.2

An SAP HANA connection opened for editing can show up under *Single Server* or *Multiple Servers (Failover)* in :the connection wizard. To edit the connection, do one of the following

- .If it shows up in *Single Server*, modify the host name and instance number of the data source
- .If it shows up in *Multiple Servers (Failover)*, modify the server host and port

7.19.3 Before Configuring Single Sign-On for SAP HANA Connections

> **→ Remember**
>
> This section is about configuring single sign-on through Windows AD with Kerberos for SAP HANA .connections

Before setting up the necessary Java VM options, you must create the JAAS `bscLogin.conf` and Kerberos `krb5.ini` configuration files to prepare your application for Windows AD authentication. See the *SAP .BusinessObjects Business Intelligence platform Administrator Guide* for more information

Related Information

[143 To Configure Single Sign-On to SAP HANA for the Information Design Tool [page

[144 To Configure Single Sign-On to SAP HANA for Web Intelligence [page

[145 To Configure Single Sign-On to SAP HANA for Web Intelligence Rich Client [page

[143 Before Configuring Single Sign-On for SAP HANA Connections [page

7.19.4 To Configure Single Sign-On to SAP HANA for the Information Design Tool

The following steps enable single sign-on to the SAP HANA database through JDBC from the information .design tool

:Do one of the following

Option	Description

To configure SSO for local connections through JDBC	.1 Exit the information design tool
	.2 Open the `InformationDesignTool.ini` file for editing
	.It is located at the `<bip-install-dir>\win32_x86` directory
	.3 Add the following lines:
	`Djava.security.auth.login.config=C:\<location>\bscLogin.conf-`
	`Djava.security.krb5.conf=C:\<location>\Krb5.ini-`
	where `<location>` is the configuration file directory on the machine where the Connection Server .is running
	.4 Save the file
	.5 Restart the information design tool

Option	Description

To configure SSO for connections located on the CMS through JDBC	.The objective is to configure the Adaptive Connectivity Service
	.Open the CMC .1
	Under *Connectivity Services*, stop the Adaptive Connectivity Service hosted by the Adaptive .Processing Server .2
	.Go to the *Properties* page .3
	:Add the following options to the *Command Line Parameters* property .4
	`Djava.security.auth.login.config=C:\<location>\bscLogin.conf-`
	`Djava.security.krb5.conf=C:\<location>\Krb5.ini-`
	where `<location>` is the configuration file directory on the machine where the Connection Server .is running
	.Click *Save* .5
	.Restart the service from the CMC .6
	→ Remember
	You also need to configure the Adaptive Connectivity Service to enable SSO with Web Intelligence Rich Client in Connected mode. These steps also allow you to configure SSO for all other Java services, such as the Data Federation services. You use Data Federation services when querying on .a multisource-enabled universe built on an SAP HANA connection

7.19.5 To Configure Single Sign-On to SAP HANA for Web Intelligence

The following steps enable single sign-on to the SAP HANA database through JDBC for SAP BusinessObjects .Web Intelligence

> **i Note**
>
> This procedure applies to the Java or HTML interface of SAP BusinessObjects Web Intelligence that the .application user launches from the BI launch pad

> **→ Remember**
>
> This configuration only addresses Web Intelligence reporting services hosted by the Web Intelligence .Processing Server

.Open the CMC .1

Under *Web Intelligence Services*, stop the reporting service hosted by the Web Intelligence Processing .Server .2

.Open the `cs.cfg` file for editing .3

:In the `JavaVM` section, add the following Java VM options .4

```
<Options>
Option>-Djava.security.auth.login.config=C:\<location>\bscLogin.conf</>
<Option
```

```
<Option>-Djava.security.krb5.conf=C:\<location>\Krb5.ini</Option>
<Options/>
```

where <location> is the configuration file directory on the machine where the Connection Server is running.

5. Save the file.
6. Restart the service from the CMC.

Related Information

[166 JVM Settings [page

7.19.6 To Configure Single Sign-On to SAP HANA for Web Intelligence Rich Client

The following steps enable single sign-on to the SAP HANA database through JDBC from the Web Intelligence Rich Client application.

Follow one of the procedures below:

- If you connect to Web Intelligence Rich Client from a WID document or from the Windows Start menu:
  1. Close your document and exit from Web Intelligence Rich Client.
  2. Create the following environment variables:
     - `java.security.auth.login.config=C:\<location>\bscLogin.conf`
     - `java.security.krb5.conf=C:\<location>\Krb5.ini`

     where <location> is the configuration file directory on the machine where Connection Server is running.
  3. Restart Web Intelligence Rich Client.
- If you use Web Intelligence Rich Client in Connected mode from the BI launch pad (also known as HTTP mode), you must configure the Adaptive Connectivity Service. Follow the steps described to configure single sign-on for the information design tool.

Related Information

[143 To Configure Single Sign-On to SAP HANA for the Information Design Tool [page

To Configure the Java Virtual Machine for Instrumentation with SAP HANA Connections 7.19.7

You can monitor the activity of SAP HANA drivers if you install CA Wily Introscope with the BI platform. This .instrumentation provides end-to-end tracing support for SAP HANA connections through ODBC and JDBC

SAP HANA tracing is enabled by default in the platform. However, you also have to configure the Java Virtual .Machine to use the JNI bridge

1. .Open the `cs.cfg` file for editing
2. :Add the following JAR file paths to the `JavaVM` section in order to load the necessary classes

```
<ClassPath>
Path>"<bip-install-dir>\java\lib\TraceLog.jar;<bip-install-dir>\java\lib>
"\external\com.sap.js.passport.api.jar
<Path/>
<ClassPath/>
```

3. :Add the following options to the `JavaVM` section

```
<Options>
<Option>-javaagent:<bip-install-dir>\java\wily\Agent.jar</Option>
Option>-Dcom.wily.introscope.agentProfile=<bip-install-dir>\java\wily>
<\IntroscopeAgent_CSJNI.profile</Option
<Option>-Dcom.wily.introscope.agent.agentName=CSJNIEngine</Option>
<Options/>
```

4. .Save the file
5. .Open the `IntroscopeAgent_CSJNI.profile` for editing

   .It is located in the `<bip_install_dir>\java\wily` directory
6. :Replace `localhost` with the host name of the Introscope Agent in the following line

```
introscope.agent.enterprisemanager.transport.tcp.host.DEFAULT=localhost
```

7. .Save the file

Related Information

[166 JVM Settings [page

SAP HANA 2.0 SPS2 7.20

The Data Access layer allows the BI platform to connect SAP HANA database 2.0 SPS 02 using ODBC and .JDBC on all platforms

SAP MaxDB Connections 7.21

On ODBC, make sure to use the SAP MaxDB ODBC driver version 7.7.07 (build number 07 or higher). SAP MaxDB provides ASCII and Unicode drivers for both Microsoft Windows and UNIX. The ASCII version of the ODBC driver always connects to the database kernel with ASCII. The Unicode version of the ODBC driver .connects to ASCII database kernels via ASCII and to Unicode database kernels with UCS2

SAP MaxDB does not require a specific driver manager on UNIX. However, it can be configured to work with the :following driver managers if needed

- unixODBC 2.0.9 or higher
- iODBC 3.0.5 or higher

On JDBC, make sure to use the latest version of the `sapdbc.jar` driver. For more information about SAP .MaxDB JDBC driver, refer to `maxdb.sbo` configuration file

SAP BW Connections 7.22

Relational connections to SAP BW do not use Connection Server. These connections go through a dedicated .connector and use a specific facade in SAP BW

For details on how to configure and tune connections to SAP BW, see the *Data Federator Administration Tool .Guide*

Requirements for Connecting Data Federator to SAP BW 7.22.1

:To connect to SAP BW, you must have a compatible release of SAP BW, as well as the appropriate SAP notes

- .The minimum required release is SAP BI 7.01 SP06

> **i Note**
>
> .The official name SAP BW changed between releases. Before release 7.3, it was called SAP BI

- .The required SAP note is: https://launchpad.support.sap.com/#/notes/1460273

.For details on supported versions of SAP BW, see the *Product Availability Matrix*

Requirements for Making SAP BW Connections Work in the Information Design Tool 7.22.2

.An external application such as the information design tool can connect to SAP BW if SAP Gateway permits

To make connections work in the information design tool, ensure the SAP Gateway security settings for .external programs are configured properly. For more information, see the SAP Gateway online documentation

Related Information

Security Parameters - Connectivity - SAP Library

Requirements for Accessing Multisource-Enabled Universes on SAP BW 7.22.3

.Application users require authorizations to access multisource universes based on the SAP BW database

For information on the authorizations necessary for users of query and reporting applications to access .multisource universes on SAP BW, see the SAP Note #1465871

Related Information

SAP Note #1465871

SAS Connections 7.23

Connections to SAS do not use Connection Server. They use an adapted JDBC connector to SAS/SHARE data .sets

.To configure these connections, you need to install the compatible JDBC driver

.For more information about configuring SAS connectors, refer to the *Data Federator Administration Tool Guide*

Installing Drivers for SAS Connections 7.23.1

In order to use a SAS connector, you must install a driver that lets the data federation query engine connect to .a SAS/SHARE server

A SAS/SHARE server is a server that allows you to connect to SAS data sets. For more information about SAS/ .SHARE, see the SAS website

The directory where you should copy the SAS JDBC driver jars on the machine where you installed the BI platform is `<boe-install-dir>/java/pjs/services/DataFederatorService/resources/drivers/ .sas`

.You must create the `drivers/sas` directories under the `resources` directory

.For details on supported versions of SAS, see the *Product Availability Matrix*

Related Information

http://www.sas.com/products/share/index.html

Teradata Connections - Mapping Teradata Database to Current Owner 7.24

.The following section provides configuration information for Teradata connections

A Teradata database supports table owners, but not qualifiers. The Connection Server returns the current user as current owner for Teradata data sources. However, the data source may be configured to map a user to the database of another user. In this case, you can configure the Teradata driver to map the current owner to the database with the `Replace Current Owner With Database` parameter. You can only use this parameter .with ODBC connections

Related Information

[224 Replace Current Owner With Database [page

Teradata 16 7.25

The Data Access layer provides a new driver for connecting SAP BusinessObjects applications to Teradata 16 .data sources

Amazon Connections 7.26

.The following sections describe how to create connections to Amazon databases

To Create Simba JDBC Connection to Amazon RedShift 7.26.1

The Data Access layer allows BI platform to connect to the Amazon RedShift databases through JDBC on all .platforms

1. While installing BI Platform, the Amazon jar get saved at `<connectionserver-install-dir>` .`\connectionServer\jdbc\drivers\amazonsimba4` directory
2. In the connection wizard, specify **`Server Name`** for server and **`Port Number`** for port and the **`Database`** .**`Schema`** for database schema in the *Server (host:port)* field

.You have created a connection to the Amazon RedShift database

To Create Simba ODBC Connection to Amazon RedShift 7.26.2

The Data Access layer allows BI platform to connect to the Amazon RedShift databases through ODBC using SAP Amazon ODBC Driver on all supported platforms. After BOE client or server installation, you need to .update the host and port number details. For more information, refer to the Simba guide

:Prerequisite

You must install the Visual C++ 2012 redistributable Update 4. The redistributable is available here: http://www.microsoft.com/en-ca/download/details.aspx?id=30679

Windows System

`Sample SAP Amazon RedShift DSN` is the Sample DSN found in the *ODBC Data Source Administrator*, refer .to this for further configuration assistance

UNIX System

For Amazon RedShift ODBC configuration on UNIX System, see `Simba ODBC Driver for Amazon .Redshift Install Guide.pdf`, which is shipped along with the product

Vertica 8.1 7.27

The Data Access layer provides a new driver for connecting SAP BusinessObjects applications to Vertica 8.1 .data sources

Creating a Connection to Data Federator XI 3.0 Query Server 8

About Data Federator XI 3.0 Query Server Connections 8.1

You can create connections to tables deployed on Data Federator XI 3.0 Query Server, in order to use these .tables with an SAP BusinessObjects application

This chapter describes configuration settings you must do on Data Federator XI 3.0 Query Server and .Connection Server to create connections

You can only create connections to Data Federator XI 3.0 Query Server by using the universe design tool. This chapter also indicates the configuration that must be made to the connection wizard to be able to create .connections

JDBC Connections

There is no additional settings for creating JDBC connections. The Data Federator JDBC driver comes with the SAP BusinessObjects Business Intelligence platform 4.0 and is configured to run seamlessly with Data .Federator XI 3.0 Query Server

ODBC Connections

With ODBC connections, the configuration depends on the SAP BusinessObjects application that you use. The .process differs if you are creating a connection to use with Web Intelligence Rich Client

> ⚠ Caution
>
> SAP recommends you use a JDBC connectivity to connect SAP BusinessObjects applications to Data Federator XI 3.0 Query Server. JDBC connectivity is available on all platforms (Microsoft Windows, UNIX .(flavors, and Linux
>
> The Data Federator ODBC middleware can only be used on Microsoft Windows and because of the use of .an OpenAccess ODBC-JDBC bridge, has impacts on performance

Related Information

[153 Configuring the Connection Wizard for a Data Federator JDBC or ODBC Connection [page
[152 About Data Federator XI 3.0 Query Server Connections [page
[155 Configuring Web Intelligence Rich Client Connections Using Data Federator ODBC Middleware [page

8.2 Configuring the Connection Wizard for a Data Federator JDBC or ODBC Connection

In order to create a connection to Data Federator XI 3.0 Query Server, you need the following information. See :your Data Federator administrator to obtain these details

- The server name and port on which the Data Federator server is running
- The name of the catalog on Data Federator Query Server
  .In the connection wizard, you enter this as the name of the database to which you are connecting
- The authentication details for the installation of Data Federator Query Server that serves the catalog to which you are connecting

In the connection wizard, from the *Database Middleware Selection* screen, you use either the *SAP .BusinessObjects*, *Data Federator Server*, *JDBC Drivers* or *ODBC Drivers* middleware to create the connection

To configure an ODBC connection to Data Federator XI 3.0 Query Server, there are some additional configurations that you must make. If you are using Web Intelligence Rich Client, the configuration changes .required are different to those used by other SAP BusinessObjects applications

8.3 Configuring Data Federator ODBC Connections

This section contains Data Federator XI 3.0 Query Server additional settings and Connection Server configuration changes for ODBC connections to all SAP BusinessObjects applications except Web Intelligence .Rich Client

:The configuration details in this section refer to the following paths

- `data-federator-drivers-install-dir>\OaJdbcBridge`: the root installation directory for the> Data Federator ODBC middleware. Your administrator chose this directory when running the Data .Federator drivers installer
- `data-federator-drivers-install-dir>\JdbcDriver`: the root installation directory for the Data> Federator JDBC middleware. Your administrator chose this directory when running the Data Federator .installer
- `.bo-install-dir>`: the root installation directory for your SAP BusinessObjects applications>

> **i Note**
>
> Edit the files in an XML editor to make sure your files are well-formed. After you make the configuration changes shown below, re-start your system for the changes to take effect.

Related Information

[154 Configuring the Data Federator ODBC Middleware [page
[155 Configuring Connection Server for a Data Federator ODBC Connection [page

Configuring the Data Federator ODBC Middleware 8.3.1

> **i Note**
>
> This topic applies to all SAP BusinessObjects applications that use Connection Server except Web Intelligence Rich Client.

To configure the Data Federator ODBC middleware, you need to modify the `openrda.ini` file. This file is installed in the following directory:

- `data-federator-drivers-install-dir>\OaJdbcBridge\bin\iwinnt>`

Set parameters in the `[JavaIp]` section, as follows:

- `CLASSPATH=<data-federator-drivers-install-dir>\OaJdbcBridge\oajava\oasql.jar;<data-federator-drivers-install-dir>\JdbcDriver\thindriver.jar;<bo-install-dir>\SAP BusinessObjects Enterprise XI 4.0\java\lib\ConnectionServer.jar`
- `JVM_DLL_NAME=<bo-install-dir>\javasdk\jre\bin\client\jvm.dll`
- `JVM_OPTIONS=-DODBCMode=true -Dbusinessobjects.connectivity.directory=<bo-install-dir>\SAP BusinessObjects Enterprise XI 4.0\dataAccess\connectionServer`

> **i Note**
>
> Check the `openrda.ini` file to ensure that this path is not set using the `Djava.endorsed.dirs` parameter. If it is, then you must remove the path from the `Djava.endorsed.dirs` parameter.

8.3.2 Configuring Connection Server for a Data Federator ODBC Connection

> **i Note**
>
> This topic applies to all SAP BusinessObjects applications that use Connection Server except Web .Intelligence Rich Client

To configure Connection Server, you need to change the configuration file: `<connectionserver-install-dir>\connectionServer\cs.cfg`

:To configure the `cs.cfg` file, set parameters under the `JavaVM` tag, as follows

```
<ClassPath>
Path>\\<data-federator-drivers-install-dir>\\OaJdbcBridge\\oajava\\oasql.jar</>
<Path
<Path>\\<data-federator-drivers-install-dir>\\JdbcDriver\\thindriver.jar</Path>
<ClassPath/>
```

8.4 Configuring Web Intelligence Rich Client Connections Using Data Federator ODBC Middleware

When creating Web Intelligence Rich Client connections that use Data Federator ODBC middleware, you need to make the configuration changes described in this section. Without the correct configuration amendments, .the connection generates errors. This type of connection is supported in a Windows environment only

> **→ Remember**
>
> .The details below relate to Web Intelligence Rich Client only

:To create connections that use Data Federator ODBC middleware, you need to modify the configurations for

- The ODBC middleware
- Connection Server
- The Windows RichClient registry key

:The configuration details in this section refer to the following paths

- `data-federator-drivers-install-dir>\OaJdbcBridge`: the root installation directory for the> Data Federator ODBC middleware. Your administrator chose this directory when running the Data .Federator drivers installer
- `data-federator-drivers-install-dir>\JdbcDriver`: the root installation directory for the Data> Federator JDBC middleware. Your administrator chose this directory when running the Data Federator .installer
- `.bo-install-dir>`: the root installation directory for your SAP BusinessObjects applications>

> **i Note**
>
> .Edit the files in an XML editor to make sure your files are well-formed

Related Information

[155 Configuring Web Intelligence Rich Client Connections Using Data Federator ODBC Middleware [page
[157 Configuring Connection Server for a Web Intelligence Rich Client Connection to Data Federator [page
[157 Setting the Windows RichClient Registry Key [page
Configuring Connection Server for Connections of Web Intelligence Rich Client or Universe Design Tool to Data
[157 Federator [page

8.4.1 Configuring the Data Federator ODBC Middleware for a Connection to Web Intelligence Rich Client

To configure the Data Federator ODBC middleware, you need to modify the `openrda.ini` file. This file is :installed in the following directory

- `data-federator-drivers-install-dir>\OaJdbcBridge\bin\iwinnt>`

:To configure the `openrda.ini` file, set parameters in the `[JavaIp]` section, as follows

- `CLASSPATH=<data-federator-drivers-install-dir>\OaJdbcBridge\oajava \oasql.jar;<data-federator-drivers-install-dir>\JdbcDriver\thindriver.jar;<bo-install-dir>\SAP BusinessObjects Enterprise XI 4.0\java\lib\ConnectionServer.jar`
- `JVM_DLL_NAME=<bo-install-dir>\javasdk\jre6\bin\client\jvm.dll`

> **i Note**
>
> .Web Intelligence Rich Client requires JDK 6

- `JVM_OPTIONS=-DODBCMode=true -Dbusinessobjects.connectivity.directory=<bo-install-dir>\SAP BusinessObjects Enterprise XI 4.0\dataAccess\connectionServer`

> **i Note**
>
> Check the `openrda.ini` file to ensure that this path is not set using the `Djava.endorsed.dirs` .parameter. If it is, then you must remove the path from the `Djava.endorsed.dirs` parameter

8.4.2 Configuring Connection Server for a Web Intelligence Rich Client Connection to Data Federator

To configure Connection Server for a Web Intelligence Rich Client connection to Data Federator, you need to change the configuration file: `<connectionserver-install-dir>\connectionServer\cs.cfg`

:To configure the `cs.cfg` file, set parameters under the `JavaVM` tag, as follows

```
<ClassPath>
Path>\\<data-federator-drivers-install-dir>\\OaJdbcBridge\\oajava\\oasql.jar</>
<Path
<Path>\\<data-federator-drivers-install-dir>\\JdbcDriver\\thindriver.jar</Path>
<ClassPath/>
```

8.4.3 Setting the Windows RichClient Registry Key

.To modify the Windows RichClient registry key, use a tool such as regedit

1. In the registry, locate the `HKEY_LOCAL_MACHINE\SOFTWARE\SAP BusinessObjects\Suite XI .4.0\default\WebIntelligence\RichClient` key.
2. In this key, add the following values to the `classpath` entry. As with all registry key values, the values must be separated with a semicolon.
   - `data-federator-drivers-install-dir>\OaJdbcBridge\oajava\oasql.jar>`
   - `data-federator-drivers-install-dir>\JdbcDriver\thindriver.jar>`
3. :(In the `RichClient\JVMOptions` key, add the following value to the `6` entry (if five entries already exist
   - `ODBCMode=true`

8.4.4 Configuring Connection Server for Connections of Web Intelligence Rich Client or Universe Design Tool to Data Federator

It is possible to use a single configuration for creating an ODBC connection to Data Federator from the universe design tool as well as Web Intelligence Rich Client. In addition to the configuration settings described :previously, do one of the following sets of instructions

- :Do the following
  1. .Run regedit tool
  2. In the registry, locate the `HKEY_LOCAL_MACHINE\SOFTWARE\SAP BusinessObjects\Suite XI .4.0\default\ConnectionServer\Configuration` key.
  3. In this key, add the following value to the `JVM Library` entry: `<bo-install-dir>\javasdk .\jre6\bin\client\jvm.dll`.

- Do the following:
  1. Open the `cs.cfg` file for editing.
  2. Locate the `JavaVM` tag.
  3. Set `LibraryName` to the same JVM directory path specified in the `openrda.ini` file:

```
...
<JavaVM>
LibraryName JNIVersion="JNI_VERSION_1_4">\\<bo-install-dir>\\javasdk\>
<\jre6\\bin\\client\\jvm.dll</LibraryName
<JavaVM/>
```

> **Caution**
>
> The universe design tool and OpenEdge bridge must specify the same JVM directory path.

Configuring Data Access Global Parameters 9

About Global Parameters 9.1

You can configure the global parameter values that apply to all connections. You can do this to improve .performance, or to resolve issues with the connection that arise

Data access global parameters are maintained in the `cs.cfg` file. This is an XML file that contains Connection .Server configuration parameters, and default configuration parameters that apply to all data access drivers

.To override these global settings, you can edit settings in the SBO configuration file of each driver

Related Information

[178 Configuring Driver Parameters [page

About the cs.cfg Configuration File 9.2

:On Microsoft Windows, the `cs.cfg` file is stored in the following location

- `connectionserver-install-dir>\connectionServer>`

:In the `cs.cfg` file, you can configure parameters in the following sections only

- `Capabilities`
  .This section defines parameters that allow you to specify the use of local or remote Connection Server
- `Settings`
  This section defines Connection Server global configuration parameters, including which drivers to load at .startup in library mode
- `JavaVM`
  .This section defines the default library of the Java Virtual Machine (JVM) used by the data access layer
- `DriverDefaults`
  This section defines parameters that apply to all data access drivers. They can be overridden for a specific driver by corresponding settings in the `<driver>.sbo` configuration files, where `<driver>` is the name of .the data access driver to which the SBO file relates

- `Traces`
  This section defines parameters that allow the recording of connection activity through Connection Server .in log files

The remaining `Locales` section defines the operating system charset for each available language. You must .not modify the parameters in this section

To View and Edit the cs.cfg File 9.3

1. :Browse to the directory that stores the `cs.cfg` file. For example, on a Microsoft Windows system
   `connectionserver-install-dir>\connectionServer\cs.cfg` where `<connectionserver->` .`install-dir>` is the path where your Connection Server software is installed
2. .Open `cs.cfg` in an XML editor
3. .Expand sections as required
4. .Set parameters by either adding new parameters and values, or modifying existing parameter values
5. .Check that the document is valid against the DTD, then save and close the file

> → Remember
>
> .You must restart Connection Server after editing the `cs.cfg` file

Configuring the Global Settings Parameters 9.4

The `Settings` section of `cs.cfg` defines settings that apply to all drivers, and cannot be customized for .individual data access drivers

To view or edit parameters, open `cs.cfg` in an XML editor and go to the `Settings` section. In the file, each :parameter is defined in the following tag

```
<Parameter Name="<parameter>"><value> </Parameter>
```

.where `<parameter>` is the name of the parameter, and `<value>` is the value to which the parameter is set

:Each parameter is shown with the following information

- Example of how the parameter appears in the XML file
- Description of the parameter
- (Possible values that can be set for the parameter (where applicable
- Default value for the parameter

> **i Note**
>
> Some settings can only be modified from the Central Management Console (CMC). For more information .about it, refer to the *SAP BusinessObjects Business Intelligence platform Administrator Guide*

Charset List Extension 9.4.1

```
<Parameter Name="CharSet List Extension">crs</Parameter>
```

Description	
.Sets the file extension for character set files **i Note** .Do not change this setting	
Default	`crs`

Config File Extension 9.4.2

```
<Parameter Name="Config File Extension">sbo</Parameter>
```

Description	
.Sets the file extension for general configuration files **i Note** .Do not change this setting	
Default	`sbo`

Description Extension 9.4.3

```
<Parameter Name="Description Extension">cod</Parameter>
```

Description	Note .Do not change this setting .Sets the file extension for the connection description files
Default	`cod`

Ignore Driver Load Failure 9.4.4

```
<Parameter Name="Ignore Driver Load Failure">Yes</Parameter>
```

Description	Determines action taken when a driver fails to load. The parameter lets you choose whether you want a usable connection possibly without all drivers operating, or a fatal .error and no functionality when a driver fails to load Note .This parameter is ignored in server deployment mode
Values	`Yes`: Connection Server generates a warning message when .a driver fails to load `No`: Connection Server generates a fatal error when a driver .fails to load
Default	`Yes`

Related Information

[162 Load Drivers On Startup [page

Load Drivers On Startup 9.4.5

```
<Parameter Name="Load Drivers on Startup">No</Parameter>
```

> **Caution**
>
> .`Load Drivers On Startup` only applies to library mode

Description	.Determines how driver libraries are loaded
Values	• `Yes`: all installed drivers are loaded during the .initialization phase • .`No`: drivers are loaded on demand
Default	`No`

Max Pool Time 9.4.6

```
<Parameter Name="Max Pool Time">-1</Parameter>
```

> ⚠ Caution
>
> .`Max Pool Time` is available for library mode only

You can change connection pool timeout for server mode on the *Properties* page of the server in the CMC. See the *SAP BusinessObjects Business Intelligence platform Administrator Guide*. Value applies to Connection Server stand alone server installations. For information on deploying Connection Server on a dedicated node, .see the *SAP BusinessObjects Business Intelligence platform Planning Guide*

Description	Determines the maximum length of time that an unused connection can remain idle in the connection pool. This represents an upper bound for connection lifetimes. A connection pool is a mechanism used by data access drivers to re-use database connections, to make the best use of .system resources You can set `Max Pool Time` for the library deployment mode only. Value applies to nodes that have Connection .Server installed with server products
Values	.No timeout, keep alive for the whole session :`1-` .Connection not managed by the pool :`0` .(Idle lifetime (in minutes :`0<`
Default	`1-`

Related Information

[34 Connection Pools [page

Setup File Extension 9.4.7

```
<Parameter Name="Setup File Extension">setup</Parameter>
```

Description	
.Sets the extension for data access driver setup files **i Note** .Do not change this setting	
Default	setup

SQL External Extension 9.4.8

```
<Parameter Name="SQL External Extension">rss</Parameter>
```

Description	
.Sets the file extension for external SQL files **i Note** .Do not change this setting	
Default	rss

SQL Parameter Extension 9.4.9

```
<Parameter Name="SQL Parameter Extension">prm</Parameter>
```

Description	
.Sets the file extension for SQL parameter files **i Note** .Do not change this setting	
Default	prm

Strategies Extension 9.4.10

```
<Parameter Name="Strategies Extension">stg</Parameter>
```

Description	Sets the extension for strategy files. **i Note** Do not change this setting.
Default	`stg`

Validate Configuration Files 9.4.11

```
<Parameter Name="Validate Configuration Files">No</Parameter>
```

Description	Triggers the validation of the configuration files (SBO, COD, and PRM) against the XML schema. **i Note** You can only validate configuration files when using Java-based connectivities.
Default	`No`

Validate XML Streams 9.4.12

```
<Parameter Name="Validate XML Streams">No</Parameter>
```

Description	Triggers the validation of the XML streams parsed within Connection Server implementation against the XML schema (for example: connection definition). **i Note** You can only validate XML streams when using Java-based connectivities.

No	Default

JVM Settings 9.4.13

:The following table explains you the JVM's Option parameter along with relevant examples

Attribute Description	Example	Attribute Setting
In this example, as, there is no Processor attribute mentioned, by default both the Client Tools and Server .use this Option	<JavaVM> <Options> <Option>-Xrs</Option> <Options/> <JavaVM/>	Default
In this example, the Processor attribute is set to “32”. So, the Client Tools use .this Option	<JavaVM> <Options> <"Option Processor="32> <Xmx512m</Option- <Options/> <JavaVM/>	"Processor="32
In this example, the Processor attribute is set to “64”. So, the Server uses this .Option	<JavaVM> <Options> <"Option Processor="64> <Xmx2048m</Option- <Options/> <JavaVM/>	"Processor="64

Setting the Deployment Mode 9.5

The `Capabilities` section helps you specify the deployment mode of Connection Server to be used at .runtime

Beneath `Capabilities` section, `Local` name means connectivity service is locally provided, as an in-proc library embedded in the client process. `Remote` name means Connection Server is provided on a remote .server

You can enable these deployment modes independently by setting the `Active` attribute. Specific to `Local` .(capability, the `EnableJNI` attribute enables the use of Java Native Interface (JNI

i Note

A two-way JNI embedded in Connection Server allows APIs to work with Connection Server core developed in a different language. This means you can use the Java API to work with the native core and .vice-versa

Example

Default Values

The following configuration allows the library deployment mode with JNI and the server deployment .mode

```
<Capabilities>
</"Capability Name="Local" EnableJNI="Yes" Active="Yes>
</"Capability Name="Remote" Active="Yes>
<Capabilities/>
```

Example

Connection Server in Server Mode

.The following configuration allows you to use the Connection Server in server mode only

```
<Capabilities>
</"Capability Name="Local" EnableJNI="Yes" Active="No>
</"Capability Name="Remote" Active="Yes>
<Capabilities/>
```

In this mode, only the drivers installed on the back-end system of the BI platform can be used to create .connections

If a server instance is running, you can create a local connection based on a driver installed on the back-end system of the platform. If you stop the server instance, you cannot create any connections, because .this setting does not allow you to use a driver installed on the client machine

Related Information

[24 Connectivity Services [page

Configuring the Deployment Mode 9.6

.Parameters defined in the `Settings` section of the `cs.cfg` file control the deployment mode

Library mode

.Parameters in the `Library` section control library mode

Server mode

You manage this mode from the CMC of your SAP BusinessObjects Enterprise installation. Parameters displayed on the *Properties* page of the server control the CORBA access. See the *SAP BusinessObjects .Business Intelligence platform Administrator Guide* for more information

Configuring the Drivers to Load 9.7

The default behavior of Connection Server is to load all available drivers. However, you can select the data .sources to be exposed by Connection Server

Library mode

Uncomment the `ActiveDataSources` section beneath `Library` in the `cs.cfg` file and specify the network :layers and databases you want to load. For example

```
<Library>
<ActiveDataSources>
<"NetworkLayer Name="ODBC>
</"$*.DataBase Name="MS SQL Server>
<NetworkLayer/>
<"NetworkLayer Name="Oracle OCI>
</"DataBase Name="Oracle 10>
<NetworkLayer/>
<ActiveDataSources/>
<Library/>
```

> **i Note**
>
> Database names can be regular expressions if they are pure ASCII. Patterns use GNU regexp syntax. Use the `.*` pattern to match any character. For more information about regular expressions, refer to the PERL .website at http://www.perl.com/doc/manual/html/pod/perlre.html#Regular_Expressions

Server mode

.Select the data sources in the *Active Data Sources* section of the server properties in the CMC

> ⚠ Caution
>
> To avoid connection failures, you must make sure your environment provides all the necessary middleware, otherwise you must set the network layers and databases you only need in the *Active Data Sources* section.

By allowing server specialization, this setting also addresses complex deployment scenarios involving multiple Connection Servers in server mode. For more information about complex deployment scenarios, see the *SAP BusinessObjects Business Intelligence platform Administrator Guide*.

9.7.1 Setting One Connectivity per Machine

In complex deployment scenarios, you may want to set up one connectivity per type of machine, for example you want to connect applications that come with the BI platform to a Microsoft SQL Server database installed on Microsoft Windows and to an Oracle database installed on a UNIX machine.

To avoid connection failures, you need to do one of the following:

- When doing a custom installation of the BI platform, specify the connectivities you want to deploy for each type of database you require. You do this when selecting features you would like to install.
- When configuring Connection Server in the `cs.cfg` file, set the `ActiveDataSources` section for the library mode (`Library` parent element) as you do for the server mode in the CMC. Because applications first try to establish connections through drivers installed locally, you should configure the driver filter for both modes in the same way.

9.8 Configuring the CORBA Access Protocols

You set the CORBA access protocols in the CMC of your BI platform installation. Protocols define values that Connection Server uses to process requests coming from CORBA clients or HTTP clients.

For more infomation about the CMC, see the *SAP BusinessObjects Business Intelligence platform Administrator Guide*.

9.9 Activating Logs and Traces of Connection Server and Drivers

SAP differentiates between two types of messages:

- A trace message analyzes the system in detail from a developer's point of view as an exceptional procedure.
- A log message is a permanent record of the events and status of a system.

Log messages are intended for system administrators, while traces are for developers. You can enable logs and traces for all connectivities supported by the Data Access layer (for example, ODBC, JDBC, Javabean, OLE DB, OCI, and JCo).

The Connection Server logging and tracing process relies on the SAP BusinessObjects TraceLog logging and tracing facility. It helps to log and trace the following processes:

Logs	• Startup and stop of Connection Server server instances • Single sign-on initialization • Driver loading
Traces	• Connection Server initialization and configuration • Job and dictionary creation and execution • Driver loading and activity • Startup and stop of Connection Server server instances • Initialization and activity of services of Connection Server server instances • Single sign-on initialization

About the _trace.ini Configuration File 9.9.1

You set the logging and tracing levels in the `_trace.ini` configuration file. For example, you can set the following information in the `BO_trace.ini` file:

```
;sap_log_level = log_info
;sap_trace_level = trace_debug
if
("process == "cms)
}
log_level = error; // but only log errors for the CMS
{
```

File content

In the example above, the tags defined are the following:

- `sap_log_level`, which defines the logging level
- `sap_trace_level`, which defines the tracing level
- A piece of code to specify the logging or tracing level for a process. The code is C-based or Java-based and can contain expressions, simple statements, and if-else statements.

The following tables describe the configuration values accepted by the `sap_log_level` and `sap_trace_level` tags.

SAP log level

Configuration Values	Severity
`log_info` or `log_information`	INFO
`log_warn` or `log_warning`	WARNING
`log_error`	ERROR
`log_fatal`	FATAL
`log_none`	NONE

All messages of the set severity level and higher appear in the log file. For example, if you set log severity to WARNING, all messages of severity WARNING, ERROR and FATAL are logged. The default log severity is .ERROR

SAP trace level

Configuration Values	Severity
`trace_debug`	DEBUG
`trace_path`	PATH
`trace_info` or `trace_information`	INFO
`trace_error`	ERROR
`trace_none`	NONE

All messages of the set severity level and higher appear in the log file. For example, if you set trace severity to .INFO, all messages of severity INFO and ERROR are logged. The default trace severity is ERROR

Configuration options

:You can also add the following options to the file

Description	Values	Option
.Closes the log file after each write. Default value is `false`	`true` or `false`	`always_close`
Adds the log information to the existing log files. Changes the naming pattern to exclude the PID and timestamp, and instead uses a rolling log file number. Default value is .`false`	`true` or `false`	`append`
Specifies the number of log files to keep. Default value is `0`. .A negative integer means all log files are kept	an integer	`keep_num`

Description	Values	Option
Specifies the log file directory. Default value is the value of the `BO_TRACE_LOGDIR` environment variable. A hyphen .) means the log information is directed to `stdout-`)	a string	`log_dir`
Defines a shortcut to specify both `sap_log_level` and .`sap_trace_level` values. See the table below	`none`, `low`, `medium` or `high`	`log_level`
Specifies if only messages associated with scopes appear in .log files. The default value is `false` **i Note** .A scope marks the entry and exit out of a code block	`true` or `false`	`scope_only`
.Maximal size of a log file. Default value is `10000`	a number in KB	`size`

log_level option values

The following table provides the `sap_log_level` and `sap_trace_level` values set when the corresponding .`log_level` value is specified in the configuration file

sap_trace_level Value	sap_log_level Value	log_level Value
`trace_error`	`log_error`	`none`
`trace_info`	`log_error`	`low`
`trace_path`	`log_warn`	`medium`
`trace_debug`	`log_info`	`high`

Parsing errors

Errors and warnings that may occur when parsing the `_trace.ini` file are written to an `ERR` file in the same .directory as the `INI` file. The error file name is made of the INI file name

If the same `INI` file is shared by several processes, then you do not know which process generates the error. To :generate more informative error file names, add the following lines at the top of the `_trace.ini` file

```
;"error_file = config_file + "_" + process + ".err
;"output_file = config_file + "_" + process + ".out
```

Activating Logs and Traces in the cs.cfg File 9.9.2

You can find Connection Server logs and traces with those of SAP BusinessObjects applications, such as SAP BusinessObjects Web Intelligence. You can also log and trace Connection Server separately by configuring the .`cs.cfg` file

The `Traces` section of the file helps you activate traces for Connection Server jobs and drivers. You activate job traces by setting the `Active` attribute of `Job` and `JobLevel` to `Yes`. You activate driver traces by setting the `Active` attribute of the `Middleware` to Yes. You can activate traces for a specific driver by setting the `Active` .attribute of the driver to `Yes`

Example

Default values

```
                                                <"Traces Active="Yes>
                        <"Logger Implementation="C" ClassID="csTRACELOG>
                                        Logger Implementation="Java" >
                  </"ClassID="com.sap.connectivity.cs.logging.TraceLogLogger
                                  <"Trace Name="JobLevel" Active="Yes>
                                    </"Trace Name="Job" Active="Yes>
                                                          <Trace/>
                               <"Trace Name="MiddleWare" Active="Yes>
                                </"Trace Name="Oracle" Active="Yes>
                                </"Trace Name="Sybase" Active="Yes>
                                    </"Trace Name="DB2" Active="Yes>
                                                                ...
                                    </"Trace Name="JCO" Active="Yes>
                                 </"Trace Name="BO OC" Active="Yes>
                                                          <Trace/>
                                                          <Traces/>
```

.This configuration allows by default the logging and tracing of Connection Server and drivers

To activate Logs and Traces in Library Mode 9.9.3

1. .Stop the Connection Server
2. :Create and set values to the following environment variables
   - `BO_TRACE_CONFIGDIR`, to set the folder name of configuration files for logs, for example: `C:\BOTraces\config`
   - `BO_TRACE_CONFIGFILE`, to set the name of the configuration file, for example `BO_trace.ini`
   - `BO_TRACE_LOGDIR`, to set the folder name for logs, for example: `C:\BOTraces`

Note

.These environment variables are commonly used to configure tracing of all BI platform activity

3. :Create the `BO_trace.ini` configuration file as follows

```
;sap_log_level = log_info
```

```
;sap_trace_level = trace_debug
```

> **Note**
>
> .The `INI` file name is case-sensitive

4. .Add the `logging.jar` and `tracelog.jar` directory paths to the `CLASSPATH` environment variable .For example: `C:\BOTraces\lib\logging.jar` and `C:\BOTraces\lib\tracelog.jar`
5. .Restart the Connection Server

The logs and traces are written into a file whose default name is `TraceLog_<pid>_<timestamp>_trace.log`. If you want to set another name to the log file, update the .`BO_TRACE_PROCESS` environment variable with the new name

To activate Logs and Traces in Server Mode 9.9.4

.You enable traces for jobs and drivers from the CMC. This allows you to let the server run while enabling traces

1. .Start the CMC
2. Go to the *Properties* page of either ConnectionServer server (for Native Connectivity Service) or Adaptive .(Processing Server (for Adaptive Connectivity Service
3. :In the *Low Level Tracing* section, select
   - *Enable Job Tracing* to enable job traces
   - *Enable Middleware Tracing* to enable middleware traces

> **Note**
>
> The *TraceLog* level must be set to `High` in the *TraceLog Service* section. This level is different from the .SAP log level defined through the `BO_Trace.ini` file

> **→ Remember**
>
> The *Enable Middleware Tracing* setting allows you to trace all middleware. If you want to trace only .specific middleware, you then need to configure the `cs.cfg` file and restart the server

Reading Logs and Traces 9.9.5

Connection Server traces and logs are tagged with `|CS|` in trace files. Connection Server logs are also identified by the `THIS IS A LOG` mention. Each function has its own trace. Traces contain the following :information

- `ENTER` traces, which identify the middleware API call. `EXIT` traces identify the returned call. The .middleware API does not return any call if there is no `EXIT` after `ENTER`

- Call exceptions, if `|E|` is displayed
- API errors, if the return code `-1` is displayed
- (Error or log severity (For example, `Debug`, `Path`, or `Information`
- Traced network layer and database in the `[Network Layer|Database|ID]` section of the trace
- The log and error messages

Example

Trace

The following is an excerpt of a trace with DEBUG and PATH severities obtained when the Connection Server was used in library mode:

```
BE42CC9D40484416BADEF01039652F620|2012 04 12 11:41:27.422|+0200|Debug| |<<| |
   | |TraceLog| 5256|   1|main            | |||||||||||||||||||CS||[unknown|
                                      :unknown|ID:0]CS Internal Configuration
BE42CC9D40484416BADEF01039652F621|2012 04 12 11:41:27.534|+0200|Debug| |<<| |
   | |TraceLog| 5256|   1|main            | |||||||||||||||||||CS||[unknown|
                                                                [unknown|ID:0
                                                                          ...
BE42CC9D40484416BADEF01039652F628|2012 04 12 11:41:27.920|+0200|Path| |  | | |
   |TraceLog| 5256|   1|main            | |||||||||||||||||||CS||ENTER [JDBC|
                                                                Oracle 11|ID:
0]com.sap.connectivity.cs.java.ConnectionManager{com.businessobjects.connectio
                                                  nserver.ConnectionManager}.close
BE42CC9D40484416BADEF01039652F629|2012 04 12 11:41:27.920|+0200|Path| |  | | |
   |TraceLog| 5256|   1|main            | |||||||||||||||||||CS||EXIT [JDBC|
                                                                Oracle 11|ID:
0]com.sap.connectivity.cs.java.ConnectionManager{com.businessobjects.connectio
                                                  nserver.ConnectionManager}.close
```

Example

Trace

The following is an excerpt of a trace with INFO severity obtained when the Connection Server was used in server mode:

```
         6E606102224D49849A2C17D8691FAC785011|2012 04 26 19:02:43.075|+0200||
         Information| |==| | |aps_MySIA.csjava| 7088|  53|service builder-4|
   |||||||||||||||||||CS||[unknown|unknown|ID:0]Starting CORBA NetworkLayer
                                                                  ...service
```

Example

Log

The following is an excerpt of a log obtained when the Connection Server was used in server mode:

```
        6E606102224D49849A2C17D8691FAC7B5114|2012 04 26 19:02:43.805|+0200| ||
            Information|  | | |aps_MySIA.csjava| 7088|  61|service builder-1|
   |||||||||||||||||||CS||THIS IS A LOG [unknown|unknown|ID:0]Loaded driver:
                           NetworkLayer=JDBC, Database=Generic JDBC datasource
        6E606102224D49849A2C17D8691FAC7B5116|2012 04 26 19:02:43.817|+0200| ||
            Information|  | | |aps_MySIA.csjava| 7088|  61|service builder-1|
   |||||||||||||||||||CS||THIS IS A LOG [unknown|unknown|ID:0]Loaded driver:
                                         NetworkLayer=JDBC, Database=MaxDB 7.7
                                                                          ...
        43eabdad-d3e4-ec14-89aa-0c9a9fba3101|2012 04 26 19:02:20:883|+0200| ||
 Information|  | | |connectionserver_MySIA.ConnectionServer|1576|7816|| |0|94|
```

```
0|2|-|-|-|-|-|-||||||||||CS||THIS IS A LOG [unknown|unknown|ID:
0]ConnectionServer is now started
```

Activating Logs and Traces for the OLAP Client 9.10

You can find OLAP Client logs and traces with those of SAP BusinessObjects applications, such as SAP BusinessObjects Web Intelligence. For example, you can find them with traces of the Web Intelligence .Processing Server. You can also log and trace OLAP Client separately by configuring the `OlapClient.cfg` file

You activate logs by setting the `UseLog` attribute to `yes` in the `OlapClient` section of the file. You specify the .log file path in the `LogFileName` attribute. You must not change the `UseProcessName` value

You do not need to stop the Web Intelligence Processing Server to change these settings. You can activate the .logs and traces while it is running

Example

```
[OlapClient]
UseLog =yes
UseProcessName=false
LogFileName =c:\OlapClient.log
(Factory Mode can be: Lib (inproc) or Proxy (Remoting ;
FactoryMode=Lib
...
```

.This configuration allows the logging and tracing for the OLAP Client

Related Information

[23 About the OlapClient.cfg Configuration File [page

Example of Log 9.10.1

.The following example is an excerpt of a log file for the OLAP Client obtained for an MSAS connection

```
...
XmlaConnectionWinhttp::XmlaConnectionWinhttp() ->  [0][12:04:54:025 - 2012/11/05]
Using Windows HTTP Services version 6.1.7600.16385
HTTPClient::connect() -> Using direct access [0][12:04:54:025 - 2012/11/05]
HTTPClient::connect() -> Using Windows Proxy  [0][12:04:54:040 - 2012/11/05]
(Automatic Discovery (WPAD
HTTPClient::connect() -> Using proxy settings:  [0][12:04:54:040 - 2012/11/05]
=WPAD url=http://proxy:8083, Proxy= ProxyBypass
```

```
        HTTPClient::connect() -> Connecting using  [0][12:04:54:040 - 2012/11/05]
                                   WinHttpConnect(): Hostname='olap-wxp' Port=80
      .XmlaConnectionWinhttp::Open() -> Connected [0][12:04:54:040 - 2012/11/05]
                      XmlaClient::discover() Call  [0][12:04:54:040 - 2012/11/05]
                                                        ...''DISCOVER_DATASOURCES
   SoapEnvelope::updateProperties() BeginRange=-1  [0][12:04:54:040 - 2012/11/05]
                                                                   EndRange=-1
             XmlaConnectionWinhttp::SendRequest()  [0][12:04:54:040 - 2012/11/05]
                                              .Authentication Mode = Credentials
     XmlaConnectionWinhttp::SendRequest() Setting  [0][12:04:54:040 - 2012/11/05]
                                                .basic credential to HttpRequest
      XmlaConnection::getTimeout() No timeout was  [0][12:04:54:040 - 2012/11/05]
                      .(specified in ConnectionSpecification, defaulting to 100(s
      XmlTextReader::XmlTextReader() Using libXML  [0][12:04:54:056 - 2012/11/05]
                                                                  version 2.06.32
     XmlaClient::discover() Rowset contains 1 rows [0][12:04:54:056 - 2012/11/05]
                      XmlaClient::discover() Call  [0][12:04:54:056 - 2012/11/05]
                                         'DISCOVER_DATASOURCES' ElapseTime=15ms
              XmlaClient::createOlapEntities() ->  [0][12:04:54:056 - 2012/11/05]
                  Rowset=[DISCOVER_DATASOURCES], 1 entities retrieved Elapse=15ms
                      XmlaClient::discover() Call  [0][12:04:54:056 - 2012/11/05]
                                                        ...''DISCOVER_SCHEMA_ROWSETS
   SoapEnvelope::updateProperties() BeginRange=-1  [0][12:04:54:072 - 2012/11/05]
                                                                   EndRange=-1
             XmlaConnectionWinhttp::SendRequest()  [0][12:04:54:072 - 2012/11/05]
                                              .Authentication Mode = Credentials
     XmlaConnectionWinhttp::SendRequest() Setting  [0][12:04:54:072 - 2012/11/05]
                                                .basic credential to HttpRequest
      XmlaConnection::getTimeout() No timeout was  [0][12:04:54:072 - 2012/11/05]
                      .(specified in ConnectionSpecification, defaulting to 100(s
      XmlTextReader::XmlTextReader() Using libXML  [0][12:04:54:072 - 2012/11/05]
                                                                  version 2.06.32
    XmlaClient::discover() Rowset contains 54 rows [0][12:04:54:072 - 2012/11/05]
                                                                              ...
```

Configuring Data Access Driver Parameters 10

Configuring Driver Parameters 10.1

To configure data access for a particular data access driver, you can either edit the driver configuration files to adjust the parameter settings, or create your own database entries if you need connections for specific .databases of your environment

> **i Note**
>
> For each SAP BusinessObjects application that uses Connection Server, the associated Readme file contains information on command line utilities that you can use to check your RDBMS and data access driver configuration. These utilities can create log files that trace interactive analysis server activity. Refer .to the readme file for the release for instructions on the use of these utilities

Related Information

[159 About Global Parameters [page

Data Access Configuration Files 10.1.1

:The following configuration files control data access driver configurations for each defined connection

- `cs.cfg`

  This file defines global parameters that apply to all connections. It is located in the `<connectionserver-install-dir>\connectionServer` directory.

- `driver>.sbo>`

  This file is specific to each data access driver. The `<driver>` placeholder stands for the data source to which the configuration file applies. Each SBO file is in a subdirectory of the `connectionServer` directory, where the subdirectory is named after the database network layer or middleware, for example `connectionserver-install-dir>\connectionServer\oracle` for Oracle databases.

> **i Note**
>
> The parameters set in the `DriverDefaults` section of `cs.cfg` are overridden by corresponding .settings in the SBO files

- `driver>.setup>`

This file defines the SBO file name, directory and the database network layer or middleware that relates to the driver. This file is required to make the driver usable. A driver without any setup file cannot be used. All the files are in the `.connectionserver-install-dir>\connectionServer\setup` directory>

As an example, the following `oracle_jdbc.setup` file defines the `oracle.sbo` configuration file for :Oracle data access drivers that are used to establish JDBC connections

```
...
<Driver>
<NetworkLayer Name="JDBC"></NetworkLayer>
<Directory>jdbc</Directory>
<DataFileName>oracle</DataFileName>
<Driver/>
...
```

Related Information

[159 About Global Parameters [page
[179 Installed SBO Files [page

Installed SBO Files 10.1.2

.The following `<driver>.sbo` files are installed by default on Microsoft Windows

For an up-to-date list of supported drivers, check the SAP Service Marketplace website at .support.sap.com/, or contact your SAP representative

SBO File	Database Technology	Subdirectory
db2.sbo	IBM DB2	db2
essbase.sbo	Oracle Essbase	essbase
javabean.sbo	Javabean	javabean
jco.sbo	SAP ERP	jco
datafederator.sbo	Data Federator Server	jdbc

SBO File	Database Technology	Subdirectory
db2.sbo	IBM DB2	
derby.sbo	Derby	
greenplum.sbo	Greenplum	
postgresql.sbo	PostgreSQL	
hive.sbo	HIVE	
hive.sbo	Amazon EMR HIVE	
hive.sbo	SAP Impala	
hsqldb.sbo	HSQLDB	
informix.sbo	IBM Informix	
ingres.sbo	Ingres	
jdbc.sbo	Generic JDBC	
maxdb.sbo	MaxDB	
mysql.sbo	MySQL	
neoview.sbo	HP Neoview	
netezza.sbo	Netezza	
newdb.sbo	SAP HANA	
oracle.sbo	Oracle	
sqlsrv.sbo	Microsoft SQL Server	
sybase.sbo	Sybase	
teradata.sbo	Teradata	
vertica.sbo	HP Vertica 6.1	
odata.sbo	OData 2.0	odata
access.sbo	MS Access 2007	odbc
access2010.sbo	MS Access 2010 and 2013	
datafederator.sbo	Data Federator Server	

SBO File	Database Technology	Subdirectory
db2iseries.sbo	IBM DB2 iSeries	
postgresql.sbo	PostgreSQL 8	
greenplum4.sbo	Greenplum 4	
postgresql9.sbo	PostgreSQL9	
informix.sbo	IBM Informix	
ingres.sbo	Ingres	
maxdb.sbo	MaxDB	
msexcel.sbo	MS Excel 2007	
mysql.sbo	MySQL	
neoview.sbo	HP Neoview	
netezza.sbo	Netezza	
newdb.sbo	SAP HANA	
odbc.sbo	Generic ODBC and Generic ODBC3	
openaccess.sbo	OpenAccess for Salesforce	
personalfiles.sbo	MS Excel 2010, 2013 and text files	
sqlsrv.sbo	Microsoft SQL Server	
sybase.sbo	Sybase	
teradata.sbo	Teradata	
vertica.sbo	HP Vertica 6.1	
bigdata.sbo	SAP Hive	
bigdata.sbo	SAP Impala	
bigdata.sbo	Amazon EMR HIVE	
oledb.sbo	Generic OLE DB	oledb
sqlsrv.sbo	Microsoft SQL Server	
slqsrv_as.sbo	Microsoft Analysis Services	oledb_olap

SBO File	Database Technology	Subdirectory
`open.sbo`	CSV files	`open`
`oracle.sbo`	Oracle	`oracle`
`oracle_ebs.sbo`	Oracle EBS	
`sap.sbo`	SAP BW	`sap`
`sybase.sbo`	Sybase	`sybase`
`xml.sbo`	XML	`xml`
`webservices.sbo`	Web services	

The `jdbc` subdirectory contains configuration files for managing connections to databases through JDBC network layer. Check the SAP Service Marketplace website or the series of SBO files for details on the .databases supported for JDBC connections

The `odbc` subdirectory contains the `mysql.sbo` configuration file for managing connections to MySQL database through ODBC network layer. MySQL 5 database is available on all platforms, with Unicode support. Make sure you use the MySQL Connector/ODBC 5.1.4 or higher to connect to this database. If you use an older .version of the driver on UNIX, you will encounter errors at runtime

The `odbc` subdirectory contains the `greenplum4.sbo` and `access2010.sbo` configuration files for managing connections to Greenplum 4 and PostgreSQL 9 on one hand, and Microsoft Access 2010 and 2013 on the other hand through ODBC network layer. These files are different from the `greenplum.sbo` and `access.sbo` files, because they deploy the configuration on both 32-bit and 64-bit Microsoft Windows. Greenplum 4 and .PostgreSQL 9 databases are also available on 64-bit UNIX flavors

The `odbc` subdirectory also contains the `msexcel.sbo` configuration file for managing connections to Microsoft Excel 2007 through ODBC network layer. This file deploys the configuration on 32-bit Microsoft Windows only. The `personalfiles.sbo` configuration file deploys configuration for Microsoft Excel 2010 and .2013 through ODBC on both 32-bit and 64-bit Microsoft Windows

The `open` subdirectory contains the `open.sbo` configuration file for managing connections to CSV files through the CSV OpenDriver. When developing a CSV driver based on the CSV Open driver sample using the Java Driver Development Kit, you must locate all your configuration files in this directory. For more information .about this driver, refer to the *Data Access Driver Java SDK Developer Guide*

To View and Edit SBO Files 10.1.3

⚠ Caution

Before opening an SBO file, make a backup copy of the file. Some configuration parameters must not be edited. If you change or delete them it could affect the operation of your SAP BusinessObjects .applications

.Browse to the directory that stores the SBO file for your target data access driver .1
.Open the SBO file in an XML editor .2
.Expand sections as required .3
.Locate the appropriate tag for the value to change, and change the value .4
Parameters appear in the format: `<Parameter Name="<parameter> "><value></Parameter>` .where `<parameter>` is the name of the parameter, and `<value>` is the value attributed to the parameter
.Check that the file is valid against the DTD, save and close the file .5

To Customize SBO Files 10.1.4

> ⚠ Caution
>
> When installing a new driver, you may want to customize SBO files with your own database entries and drivers. In order to avoid possible errors when editing SBO files, SAP BusinessObjects recommends you to create a separate SBO file that specifies the databases targeted by your customization and the libraries used by the driver. Beforehand you also need to create a setup file for the SBO file definition. You do not .need to modify registries

Create a setup file in the `<connectionserver-install-dir>\connectionServer\setup` directory .1
.by using an XML editor
.You specify the SBO file name, its directory and the database network layer that is used for the connection
.Check that the file is valid against the DTD, save and close the file .2
Either browse to the subdirectory where you want to store the SBO file or create your own subdirectory as .3
.specified in the setup file
.Create the SBO file with your target database and driver libraries by using an XML editor .4
.Check that the file is valid against the DTD, save and close the file .5

Apart from customizing the SBO file, you also need to create the COD, PRM and RSS files for each driver newly .installed

To Check Connections Dynamically 10.1.5

You can customize your driver to make it validate at runtime that a connection of the connection pool can be used. This validation process consists of executing an SQL query without side effect when the connection is retrieved from the pool. It means that the connection can be used if the SQL query is executed without error. If .it is not, the connection is discarded

> → Remember
>
> This functionality is available for Generic ODBC, Generic OLE DB and Generic JDBC connections. All other .supported connectivities handle this connection check already, then no customization is required

.Stop Connection Server .1

.Open the SBO file of your driver .2

.Locate the `DataBase` section that is appropriate to your connection .3
:For example, for a Generic ODBC connection

```
<DataBases>
<"DataBase Active="Yes" Name="Generic ODBC datasource>
<Libraries>
...
<Libraries/>
<Parameter Name="CharSet Table" Platform="Unix">datadirect</Parameter>
<DataBase/>
...
```

:Add the following row in the `DataBase` section .4

```
<Parameter Name="Connection Check"><SQL query></Parameter>
```

.where `<SQL query>` is the query you use to check the validity

.Save the SBO file .5

.Restart Connection Server .6

.Connection Server validates that the connection can be used before executing the data request

JDBC Driver Properties 10.1.6

:You can add JDBC driver properties by doing one of the following

- In the connection wizard of your application, at connection creation, set the *JDBC Driver Properties (key=value,key=value):* parameter. It is optional.
- .Set driver properties in the appropriate SBO file after you stop Connection Server

If the property is both set in the SBO file and through the wizard, only the value set through the wizard is taken .into account by the application

Example

.This shows the section of an `oracle.sbo` file modified with two driver properties

```
<"DataBase Active="Yes" Name="Oracle 10>
<"Class JARFile="dbd_jdbc,dbd_oracle>
com.businessobjects.connectionserver.java.drivers.jdbc.oracle.OracleDriver</
<Class
<JDBCDriver>
<Parameter Name="JDBC Class">oracle.jdbc.OracleDriver</Parameter>
Parameter Name="URL Format">jdbc:oracle:thin:@$DATASOURCE$:$DATABASE$</>
<Parameter
<Properties>
<Property Name="oracle.jdbc.defaultNChar">true</Property>
<Property Name="defaultNChar">true</Property>
<Properties/>
...
<JDBCDriver/>
...
```

```
<DataBase/>
```

Related Information

[53 To Create a JDBC Connection with the SBO File [page

About DataDirect ODBC Drivers 10.2

The Data Access layer allows the use of DataDirect ODBC 7.0 drivers for Microsoft SQL Server databases on all .UNIX platforms. These drivers can be either non-branded or branded drivers

DataDirect branded drivers are provided as part of the BI platform and can only be used with SAP BusinessObjects applications such as SAP BusinessObjects Web Intelligence. You can find them in `<boe-install-dir>/enterprise_xi40/<platform-name>/odbc/lib` directory, where `<boe-install-dir>` .stands for the BI platform installation directory and `<platform-name>` for the UNIX platform name

The Microsoft SQL Server databases can work with either a DataDirect ODBC 7.0 driver or a DataDirect ODBC 7.0 branded driver. They can also work with the 6.0 SP2 version of the driver. However, this version does not .come with the present platform release

To Enable the Use of DataDirect Branded Drivers 10.2.1

.To use the branded driver, you must make sure the data access is configured correctly

1. .Navigate to the directory that contains the `sqlsrv.sbo` file

   On UNIX, this configuration file is located in the `<connectionserver-install-dir>/.connectionServer/odbc` directory.

2. .Use an XML editor to open the `sqlsrv.sbo` file for editing
3. .Locate the `Defaults` section

   The `Use DataDirect OEM Driver` parameter is set to `No` by default. This means the data access is .configured by default to work for non-branded drivers

4. .Set the `Use DataDirect OEM Driver` parameter to `Yes` and save the file
5. :Add the following path to `LD_LIBRARY_PATH` environment variable

   `boe-install-dir>/enterprise_xi40/<platform-name>/odbc/lib>`

6. Configure the environment by editing the `env.sh` file in the `<boe-install-dir>/setup` directory and .source it

:For example

```
DEFAULT_ODBCFILE="${BOBJEDIR}enterprise_xi40/"odbc.ini
Export DEFAULT_ODBCFILE
"ODBC_HOME="${BINDIR}odbc
Export ODBC_HOME
ODBCINI="${BOBJEDIR}enterprise_xi40/"odbc.ini
export ODBCINI
```

i Note

.`DEFAULT_ODBCFILE` can point to any file which holds the connection details for the branded drivers

7. .Configure the data source by editing the `odbc.ini` file

:For example

```
[ODBC Data Sources]
sql2008=sql=DataDirect 7.0 SQL Server Native Wire Protocol
Driver=/.../enterprise_xi40/linux_x64/odbc/lib/CRsqls24.so
Description=DataDirect 7.0 SQLServer Wire Protocol Driver
Address=10.180.0.197,1433
Database=bodb01
```

8. .Start Connection Server from the CMC

Connection Server is able to create a connection to Microsoft SQL Server databases with DataDirect ODBC .branded drivers

Example

.The following is an excerpt of the default `sqlsrv.sbo` file

```
<Defaults>
<Parameter Name="Family">Microsoft</Parameter>
<Parameter Name="SQL External File">sqlsrv</Parameter>
<Parameter Name="SQL Parameter File">sqlsrv</Parameter>
<Parameter Name="Description File">sqlsrv</Parameter>
<Parameter Name="Strategies File">sqlsrv</Parameter>
...
<Parameter Name="Use DataDirect OEM Driver" Platform="Unix">No</Parameter>
<Defaults/>
...
```

SBO Parameter Reference 11

SBO File Structure 11.1

There is a `<driver>.sbo` file for each supported data access driver. Each `<driver>.sbo` file is divided into :the following sections

File Section	Description
`Defaults`	This section contains the default configuration parameters that apply to all database middleware that uses the data access driver. These parameters override .any corresponding values set in the database middleware
`Databases`	This section contains a `DataBase` child element for each database middleware .that is supported by the data access driver :Each `DataBase` element can contain the following elements or attributes • `Active`: this attribute specifies if middleware support is activated or not. Its .value is `YES` or `NO` • `Name`: this attribute specifies the name of the middleware supported by the data access driver. The middleware name values set here appear in the .Database Middleware page of the connection wizard • `Alias`: this element specifies the name of the older middleware versions no longer officially supported by the data access driver, but that are still in use. You can add an alias element for an older middleware version so that existing connections use the current data access driver instead. You can set configuration parameters specific to the old middleware as parameters of the .new alias. You can create new connections using the alias • `Parameter`: this element has a `Name` attribute and a value that applies specifically to a middleware. Values set for parameters listed here override .the values set for the same parameters in the `Defaults` section **i Note** Boolean parameters accept both `true/false` and `yes/no` as values. .Values do not depend on case

SBO Parameter Description 11.2

:The configuration parameters are listed according to the following

- Common
  This section describes SBO file parameters shared by different database technologies. The other categories describe parameters that are specific to the database technology or network layer they .represent
- JavaBean
- JCO
- JDBC
- OData
- ODBC
- OLE DB
- OLE DB for OLAP
- Sybase ASE/CTL
- Teradata

:Each parameter is shown with the following information

- Example of how the parameter appears in the XML file
- Description of the parameter
- Possible values that can be set for the parameter
- Default value of the parameter

Related Information

[189 Common SBO Parameters [page
[209 JavaBean SBO Parameters [page
[210 JCO SBO Parameters [page
[210 JDBC SBO Parameters [page
[215 OData SBO Parameters [page
[216 ODBC SBO Parameters [page
[220 OLE DB SBO Parameters [page
[221 OLE DB OLAP SBO Parameters [page
[221 Sybase SBO Parameters [page
[224 Teradata SBO Parameters [page

Common SBO Parameters 11.3

These SBO parameters are mostly common to all data access drivers. They are defined in the `Defaults` section of the files. Some of these SBO parameters are also defined in the `cs.cfg` file. Values set in the .`Defaults` section override values set in the `cs.cfg` file

`Array Bind Available` 11.3.1

```
<Parameter Name="Array Bind Available">No</Parameter>
```

Description	.Specifies whether the database supports array binding Array binding helps you optimize performance of SQL .update queries
Values	.`Yes`: the database supports array binding .`No`: the database does not support array binding
Default	.The value set in the `cs.cfg` file

`Array Bind Size` 11.3.2

! Restriction

.SAP BusinessObjects BI platform Client Tools do not use this parameter

```
<Parameter Name="Array Bind Size">5</Parameter>
```

Description	Specifies the number of rows exported with each `INSERT` .query
Values	The number of rows that are exported with each `INSERT` .((integer
Default	.The value set in the `cs.cfg` file

11.3.3 Array Fetch Available

```
<Parameter Name="Array Fetch Available">No</Parameter>
```

Description	.Specifies whether Connection Server enables array fetching Array fetching helps you optimize performance by retrieving .SQL results per slice
Values	.`Yes`: array fetching is supported .`No`: array fetching is not supported
Default	.The value set in the `cs.cfg` file

11.3.4 Array Fetch Size

```
<Parameter Name="Array Fetch Size">10</Parameter>
```

Description	Specifies the number of rows of data retrieved per slice. Connection Server provides .array fetch capability in any deployment mode **→ Remember** The `Array Fetch Size` value is propagated to the database middleware if it .supports array fetch :The optimal number depends on the performance of your system • If the number is low, the system retrieves small amounts of data many times. This .can affect performance • If the number is high, the system performs fewer retrieval operations, but it .requires more memory for each one **⚠ Caution** Make sure the `Array Fetch Size` value is appropriate because it can affect the performance of your system, especially in remote access, for example when connections to SAP ERP system are established in a web tier deployment mode. For OLAP connections in remote access (MS Analysis Services, SAP BW, and Essbase data sources through 32-bit Connection Server), set the array fetch size to an optimal value depending on the number of columns in reports to be created .((for example `100` if the number of columns is high, and `250` if the number is low In a web tier deployment mode, the *HTTP Chunk Size* parameter can also help you to fine-tune the performance by reducing the number of data calls between the client and the server. See the *SAP BusinessObjects Business Intelligence platform Administrator .Guide* for more information about HTTP chunking
Values	.(The number of rows retrieved per slice (integer `1` .specifies that array fetching is disabled `0` specifies that the driver decides which array fetch size to use. This value is only valid .for JDBC drivers
Default	.The value set in the `cs.cfg` file

Related Information

[96 SAP ERP Driver Restrictions [page

11.3.5 `BigDecimal Max Display Size`

```
<Parameter Name="BigDecimal Max Display Size">128</Parameter>
```

Description	Specifies the maximum display size of data retrieved with .BigDecimal character type
Values	.(The display size (integer in bytes
Default	.No default value

11.3.6 Binary Max Length

```
<Parameter Name="Binary Max Length">32768</Parameter>
```

Description	Specifies the maximum length of table columns whose type :is • binary and `MaxLength` value is `Max` or no fixed length is provided for OData data sources • base64Binary and hexBinary for XML data sources .Data returned is truncated if larger than specified
Default	`32768`

Related Information

[76 OData Driver [page
[96 XML Driver [page
[109 Web Service Driver [page

11.3.7 Bucket Split Size

```
<Parameter Name="Bucket Split Size">25000</Parameter>
```

Description	Specifies the number of records which are sorted in memory before they are written to the local disk. The following data access drivers use `Bucket Split Size` when they :perform the ORDER BY, GROUP BY or DISTINCT operations • CSV OpenDriver • OData driver • SAP ERP driver • XML and Web Service drivers **i Note** You can configure the directory path in the `cs.cfg` file using the `Temp Data Dir` parameter when the operating system does not specify a temporary folder. .This can happen with Linux operating systems `Bucket Split Size` affects the memory consumption. If the main memory size is too small, the parameter value is .ignored
Default	`25000`

Related Information

[117 Local Disk Used as a Cache for Sorting Operations [page
[205 Temp Data Dir [page

`Catalog Separator` 11.3.8

```
<Parameter Name="Catalog Separator">.</Parameter>
```

Description	Specifies the separator character that is used between elements of database identifiers (qualifiers, owners, tables and columns). For example, .`<<database_name>.<table_name>.<column_name`
Values	.The separator character to use. Usually a period
Default	If not specified, Connection Server uses the separator .specified in the database middleware

11.3.9 CharSet Table

```
<Parameter Name="CharSet Table">sybase</Parameter>
```

Description	Specifies the name of the table used for character set mapping between the operating system and the middleware.
Values	The name of the CRS file.
Default	No default.

11.3.10 Description File

```
<Parameter Name="Description File">oracle</Parameter>
```

Description	**i Note** Do not edit this parameter. Specifies the name of the COD file, which holds the connection wizard input field labels.

11.3.11 Dictionary Transaction Mode

```
<Parameter Name="Dictionary Transaction Mode">Transactional</Parameter>
```

Description	Specifies that the data access driver queries metadata in transaction mode. **i Note** The data access drivers query metadata in AutoCommit mode by default. To change the configuration of a driver to transactional, add the parameter to the appropriate section of the SBO configuration file (either `Defaults` or any `Database` section).

Values	`Transactional`

11.3.12 `Driver Capabilities`

```
<Parameter Name="Driver Capabilities">Procedures,Query</Parameter>
```

Description	The capabilities of the driver, that is whether it can access stored procedures and queries available in the database software. This parameter is set using the connection wizard. .You can include both values in the parameter **i Note** This parameter must be set to `Procedures` for a JavaBean driver. The functionality of a JavaBean driver is defined as stored procedures as far as SAP .BusinessObjects applications are concerned
Values	`Procedures`: the driver can use procedures stored in the .database to retrieve data `Query`: the driver can use a query language such as SQL to .retrieve data
Default	`Query`

11.3.13 `Driver Name`

```
<Parameter Name="Driver Name">Adaptive Server IQ</Parameter>
```

Description	Specifies the name of the driver that displays in *Drivers* tab .of ODBC Data Source Administrator on Microsoft Windows This parameter is ODBC-specific. It helps you filter drivers in .the ODBC Data Source Name (DSN) list

Values	.The name of the driver **i Note** You can use a regular expression based on the GNU .regexp syntax from PERL
Default	.No default value

11.3.14 Escape Character

```
<Parameter Name="Escape Character">/</Parameter>
```

Description	Specifies the character to use to escape strings of special .characters, for example patterns
Values	.The character to use as the escape character
Default	If not specified, Connection Server retrieves the value from .the middleware

11.3.15 Extensions

```
<Parameter Name="Extensions">oracle10,oracle,jdbc</Parameter>
```

Description	**i Note** .Do not edit this parameter Specifies the list of possible names for PRM and RSS files of data access drivers. This list also specifies the possible .names for directories where you can store JAR files

Related Information

[55 To Create a JDBC Connection with Extensions [page

Family 11.3.16

```
<Parameter Name="Family">Sybase</Parameter>
```

Description	
Specifies the family of the database engine that is displayed in the *Database Middleware Selection* page of the connection wizard. The set of middleware that corresponds to your license is displayed on this page in a tree view. **i Note** Do not edit this parameter.	

Force Execute 11.3.17

```
<Parameter Name="Force Execute">Never</Parameter>
```

Description	
Specifies whether the SQL query is executed before retrieving result descriptions. **i Note** Do not edit this parameter.	
Values	`Never`: SQL query is never executed before retrieving result descriptions. `Procedures`: SQL query is executed before retrieving result descriptions, but only for stored procedures. `Always`: SQL query is always executed before retrieving result descriptions.
Default	`Never`

Identifier Case 11.3.18

```
<Parameter Name="Identifier Case">LowerCase</Parameter>
```

Description	Specifies how the database handles the case behavior of simple identifiers.
Values	`CaseSensitive`: The database treats mixed case SQL identifiers as case sensitive. `LowerCase`: The database treats mixed case SQL identifiers as case insensitive and stores them in lower case. `MixedCase`: The database treats mixed case SQL identifiers as case insensitive and stores them in mixed case. `UpperCase`: The database treats mixed case SQL identifiers as case insensitive and stores them in upper case.

11.3.19 `Identifier Quote String`

```
<Parameter Name="Identifier Quote String">&quot;</Parameter>
```

Description	Specifies the character used to quote database identifiers.
Values	The character used to quote database identifiers. Usually quotes (`&quot`;).
Default	If not specified, Connection Server retrieves the information from the database middleware.

11.3.20 `Include Synonyms`

```
<Parameter Name="Include Synonyms">False</Parameter>
```

Description	Specifies if columns for Oracle Synonyms are retrieved from the Oracle database. This is valid for Oracle connections through JDBC or Oracle OCI network layers.
Values	`True`: columns for Oracle Synonyms are retrieved and display as table columns. `False`: columns for Oracle Synonyms are not retrieved.
Default	`False`

11.3.21 Integer Max Length

```
<Parameter Name="Integer Max Length">18</Parameter>
```

Description	Specifies the maximum length of table columns whose XML built-in type is integer, nonPositiveInteger, negativeInteger, .noNegativeInteger, and positiveInteger .Data returned is truncated if larger than specified `Integer Max Length` applies to XML data sources and .web services
Default	18

Related Information

[109 XML Driver - Configuring Column Maximum Size [page
[116 Web Service Driver - Configuring Column Maximum Size [page

11.3.22 Introscope Available

```
<Parameter Name="Introscope Available">True</Parameter>
```

Description	**i Note** .Do not edit this parameter Specifies if performance monitoring through CA Wily .Introscope is activated for the driver
Values	.`True`: the monitoring of the driver is activated .`False`: the monitoring of the driver is not activated
Default	The parameter is set to `False` for all the drivers in the `cs.cfg` file. The monitoring is actually activated for SAP .HANA connections only in the `newdb.sbo` file

Max Rows Available 11.3.23

```
<Parameter Name="Max Rows Available">No</Parameter>
```

Description	Specifies if the driver can limit the maximum number of .rows that can be retrieved from a data source
Values	.Yes: the maximum number of rows can be limited .No: the maximum number of rows cannot be limited
Default	No

Native Int64 Available 11.3.24

```
<Parameter Name="Native Int64 Available">False</Parameter>
```

Description	**i Note** .Do not edit this parameter Indicates if 64-bit integers can be handled directly by the .middleware
Values	.True: 64-bit integers can be handled by the middleware .False: the Data Access Layer emulates the Int64 methods
Default	False

Optimize Execute 11.3.25

```
<Parameter Name="Optimize Execute">False</Parameter>
```

Description	Specifies whether Connection Server optimizes the execution of SQL queries. This parameter is supported by .JDBC and ODBC drivers only

Values	True: SQL queries are optimized on execution wherever possible. False: SQL queries are not optimized for execution.
Default	False

11.3.26 Owners Available

```
<Parameter Name="Owners Available">No</Parameter>
```

Description	Specifies whether data access drivers handle database owners. **Note** To set table owners manually in the information design tool, you must set this parameter to Yes.
Values	Yes: owners are supported. No: owners are not supported.
Default	Not specified. Connection Server retrieves this information from the database middleware.

11.3.27 Qualifiers Available

```
<Parameter Name="Qualifiers Available">No</Parameter>
```

Description	Specifies whether data access drivers handle database qualifiers. **Note** To set table qualifiers manually in the information design tool, you must set this parameter to Yes.
Values	Yes: qualifiers are supported. No: qualifiers are not supported.

Default	Not specified. Connection Server retrieves this information .from the database middleware

11.3.28 Query TimeOut Available

```
<Parameter Name="Query TimeOut Available">False</Parameter>
```

Description	Specifies whether a query timeout is supported by the database middleware, that is if a query that is running can .be cancelled after a time period has expired
Values	.`True`: the database middleware handles query timeouts `False`: the database middleware does not handle query .timeouts
Default	`False`

11.3.29 Quote Identifiers

```
<Parameter Name="Quote Identifiers">True</Parameter>
```

Description	Specifies whether the identifier of the stored procedure .supports quotes
Values	.`True`: quotes are supported .`False`: quotes are not supported
Default	`True`

11.3.30 Skip SAML SSO

```
<Parameter Name="Skip SAML SSO">False</Parameter>
```

Description	Specifies whether the SAML implementation of single sign-on (SSO) is skipped when connecting to the SAP HANA .database For more information about single sign-on, refer to *SAP BusinessObjects Business Intelligence platform .Administrator Guide*
Values	.`True`: SAML is skipped .`False`: SAML is used first
Default	`False`

`SQL External File` 11.3.31

```
<Parameter Name="SQL External File"><filename></Parameter>
```

Description	**i Note** .Do not edit this parameter The SQL external file holds configuration details used by the .data access layer

`SQL Parameter File` 11.3.32

```
<Parameter Name="SQL Parameter File">oracle</Parameter>
```

Description	The name of the file that stores database parameters. The .extension of this file is `.prm` You must ensure that this file is located in the same .directory as the SBO configuration file
Values	.See the list of values in the SBO file
Default	.The listed values

SSO Available 11.3.33

```
<Parameter Name="SSO Available">False</Parameter>
```

Description	.Specifies whether single sign-on (SSO) is supported For more information about single sign-on, refer to *SAP BusinessObjects Business Intelligence platform .Administrator Guide*
Values	.`True`: single sign-on is supported .`False`: single sign-on is not supported
Default	`False`

Strategies File 11.3.34

```
<Parameter Name="Strategies File">oracle</Parameter>
```

Description	Specifies the name, with no extension, of the Strategy file .((`.stg` This file contains the external strategies that universe design tool uses for automatic universe creation. Strategy files are .stored in the same directory as the SBO file
Values	`db2` for IBM DB2 data access drivers `informix` for IBM Informix `oracle` for Oracle `sqlsrv` for Microsoft SQL Server `sybase` for Sybase `teradata` for Teradata
Default	.The listed values

String Max Length 11.3.35

```
<Parameter Name="String Max Length">32768</Parameter>
```

Description	Specifies the string maximum length of table columns mapped to ABAP function parameters whose length of value .is equal to zero Also specifies the maximum length of table columns whose :type is the following • String and `MaxLength` value is `Max` for OData data sources • String and any of the following for XML data sources: anyURI, QName, NOTATION, duration, gYearMonth, gYear, gMonthDay, gDay, gMonth, TYPE_NORMALIZEDSTRING, token, language, Name, NCName, XSD_TYPE_ID, IDREF, IDREFS, ENTITY, ENTITIES .Data returned is truncated if larger than specified
Default	`32768`

Related Information

[76 OData Driver [page
[93 SAP ERP Driver - Access to ABAP Functions [page
[96 XML Driver [page
[109 Web Service Driver [page

`Temp Data Dir` 11.3.36

```
<Parameter Name="Temp Data Dir">C:\temp\</Parameter>
```

Description	Specifies the directory path for the temporary data written on the disk. Use this parameter if the operating system does not specify any default temporary folder, for example: `C:\Users\<myName>\AppData\Local\Temp` The following data access drivers can use `Temp Data Dir`: • CSV OpenDriver • OData driver • SAP ERP driver • XML and Web Service drivers When the driver performs an ORDER BY, GROUP BY or DISTINCT operation, the data is written to this folder if the number of records to be sorted exceeds the `Bucket Split Size` parameter value.
Default	The parameter is commented out. Remove the comment syntax to enable the parameter.

Related Information

[117 Local Disk Used as a Cache for Sorting Operations [page
[192 Bucket Split Size [page

`Transactional Available` 11.3.37

```
<Parameter Name="Transactional Available">Yes</Parameter>
```

Description	Specifies if SQL operations run against the database are run as block transactions or individually. This parameter is not listed by default in the SBO file. Add it to the SBO file if your data access driver does not support transactional mode.

Values	`Yes`: operations against the database are run as a block when committed. `No`: each SQL statement is immediately committed, that is, `Autocommit` is deactivated. **Note** Do not use a driver with `Transactional Available=No` to access the SAP BusinessObjects repository.
Default	`Yes`. This is set in the `cs.cfg` file.

Related Information

[128 To Set the Transaction Mode for IBM Informix Connections [page
[137 To Make salesforce.com Connections Work in the Universe Design Tool [page

`Type` 11.3.38

```
<Parameter Name="Type">Relational</Parameter>
```

Description	**Note** Do not edit this parameter. Specifies the data source type.

`Unicode` 11.3.39

```
<Parameter Name="Unicode">UTF8</Parameter>
```

Description	Specifies if the access driver can benefit from the Unicode configuration of the client middleware. This parameter appears as a driver default in the `cs.cfg` file. Its value applies to all data access drivers. It is not listed by default in the SBO file. If you want to override the default value, you must add it to the `Defaults` section of the SBO file for the target data access driver.
Values	`UTF8`: 8-bit UCS/Unicode Transformation Format coding `CharSet`: Character Set coding `UCS2`: 2-byte Universal Character Set coding
Default	The value set in the `cs.cfg` file.

URL Format 11.3.40

```
<Parameter Name="URL Format "><string></Parameter>
```

Description	Specifies the URL Format. The JDBC specification does not specify the format of the connection string that it requires. Vendors use different kinds of URL format, for example: • MySQL vendor: `$jdbc:mysql://$DATASOURCE$/$DATABASE` • Oracle vendor: `jdbc:oracle:thin:@$DATASOURCE$:$$DATABASE` **Note** This parameter is supported by JDBC and JavaBean driver files only.
Values	The URL Format.
Default	No default value.

XML Max Size 11.3.41

```
<Parameter Name="XML Max Size">65536</Parameter>
```

Description	.Specifies the maximum size of data retrieved in XML format
Values	.(The maximum allowed XML size (in bytes
Default	.This varies depending on the database

JavaBean SBO Parameters 11.4

.These parameters apply to the JavaBean SBO file. They are used to configure a JavaBean connection

These parameters are defined in the `\\<connectionserver-install-dir>\connectionServer\javabean\javabean.sbo` file.

JavaBean Class 11.4.1

```
<Parameter Name="JavaBean Class"><string></Parameter>
```

Description	Defines the entry point of the JavaBean that the SAP .BusinessObjects application uses The entry point is the definition of a java class extending from the `Bean` interface specified through the `com.businessobjects` package.
Values	.A fully qualified JavaBean class name
Default	.No default value

JCO SBO Parameters 11.5

These parameters apply to the SAP ERP database technology. They are used to configure a connection to a .SAP ERP system

These parameters are defined in the `\\<connectionserver-install-dir>\connectionServer\jco` .`\jco.sbo` file

ERP Max Rows 11.5.1

```
<Parameter Name="ERP Max Rows">2147483647</Parameter>
```

Description	Specifies the maximum number of rows that can be .returned by a query to an InfoSet or SAP Query with no filter
Values	.An integer equal or lower than 2147483647
Default	`2147483647`

Related Information

[89 SAP ERP Driver [page

JDBC SBO Parameters 11.6

.These parameters apply to the JDBC SBO file. They are used to configure a JDBC connection

These parameters are defined in the SBO files of `\\<connectionserver-install-dir>` .`\connectionServer\jdbc` directory

Connection Shareable 11.6.1

```
<Parameter Name="Connection Shareable">False</Parameter>
```

Description	**i Note** .Do not edit this parameter Specifies if a connection of a connection pool is shareable between different requesters. Operates in conjunction with .the `Shared Connection` parameter
Values	`True`: the connection can be shared between multiple .users .`False`: the connection cannot be shared between users
Default	`False`

Related Information

[213 Shared Connection [page

11.6.2 `Escape Character Available`

```
<Parameter Name="Escape Character Available">True</Parameter>
```

Description	Specifies whether the JDBC network layer handles an escape clause after the `like` expression of the SQL query. This clause helps you to specify a character to escape .(_) specific characters such as underscores
Values	.`True`: an escape clause is supported .`False`: no escape clause is supported
Default	`True`

11.6.3 `ForeignKeys Available`

```
<Parameter Name="ForeignKeys Available">True</Parameter>
```

Description	.Specifies if foreign keys of database tables can be retrieved
Values	.`True`: foreign keys can be retrieved .`False`: foreign keys cannot be retrieved
Default	`True`

11.6.4 `Get Extended Column`

```
<Parameter Name="Get Extended Column">No</Parameter>
```

Description	**i Note** .Do not edit this parameter Specifies if the Data Access layer uses the `getExtendedColumns` stored procedure provided by .Data Federator Query Server to retrieve input columns
Values	.`Yes`: `getExtendedColumns` is used .`No`: `getExtendedColumns` is not used
Default	`No`

11.6.5 `JDBC Class`

```
<Parameter Name="JDBC Class"><string></Parameter>
```

Description	.The fully qualified Java class of JDBC driver
Values	:Depends on the vendor or data source, for example • `oracle.jdbc` for OracleDriver for Oracle • `com.ibm.db2.jcc.DB2Driver` for DB2
Default	.No default value

11.6.6 PrimaryKey Available

```
<Parameter Name="PrimaryKey Available">True</Parameter>
```

Description	Specifies whether the primary keys of database tables can be retrieved.
Values	True: primary keys can be retrieved. False: primary keys cannot be retrieved.
Default	True

11.6.7 PVL Available

```
<Parameter Name="PVL Available">True</Parameter>
```

Description	Specifies whether the connection supports Preferred Viewing Locale (PVL) functionality. It is only supported by SAP HANA connections in this release.
Values	True: PVL is supported. False: PVL is not supported.

11.6.8 Shared Connection

```
<Parameter Name="Shared Connection">False</Parameter>
```

Description	**i Note** .Do not edit this parameter Specifies whether the requested connection of a connection pool is shared. Operates in conjunction with the `Connection Shareable` parameter. Is not taken into account if the `Max Pool Time` parameter of `cs.cfg` is .set to `0`
Values	.`True`: the connection is shared .`False`: the connection is not shared
Default	`False`

Related Information

[210 Connection Shareable [page
[163 Max Pool Time [page

`JDBC ResultSet Type` 11.6.9

```
<Parameter Name="JDBC ResultSet Type">1003</Parameter>
```

Description	**i Note** You must use this parameter along with `JDBC` .`ResultSet Concurrency`. It is not mandatory Specifies the `resultSetType` argument value of the .`createStatement` Java method This method belongs to the `java.sql.Connection` interface. You add this parameter to create a default `Statement` object and fine-tune your connection .performance
Values	You set either standard Java values or database-specific .values. Values must be integers

Related Information

createStatement method
ResultSet interface

JDBC ResultSet Concurrency 11.6.10

```
<Parameter Name="JDBC ResultSet Concurrency">1007</Parameter>
```

Description	
Note You must use this parameter along with JDBC .ResultSet Type. It is not mandatory Specifies the resultSetConcurrency argument value .of the createStatement Java method This method belongs to the java.sql.Connection interface. You add this parameter to create a default Statement object and fine-tune your connection .performance	
Values	You set either standard Java values or database-specific .values. Values must be integers

Related Information

createStatement method
ResultSet interface

OData SBO Parameters 11.7

.These parameters are used to configure connections to data sources that are using the OData protocol

These parameters are defined in the \\<connectionserver-install-dir>\connectionServer\odata .\odata.sbo file

11.7.1 Enforce Max Protocol Version

```
<Parameter Name="Enforce Max Protocol Version">Yes</Parameter>
```

Description	Specifies if the driver sends the supported version of the .OData protocol to the OData provider If it does, the OData provider can decide whether it answers the driver in the given protocol. This parameter can be helpful when the BI platform is connecting to a provider that .is using the OData 3.0 protocol
Values	`Yes`: the driver sends the supported version of the OData .protocol `No`: the driver does not send the supported version of the .OData protocol
Default	`Yes`

11.8 ODBC SBO Parameters

.These parameters apply to the ODBC network layer. They are used to configure an ODBC connection

These parameters are defined in the SBO files of `\\<connectionserver-install-dir>` `.\connectionServer\odbc` subdirectory

11.8.1 CharSet

```
<Parameter Name="CharSet">ISO88591</Parameter>
```

Description	**i Note** .Do not edit this parameter Specifies the character set of the data returned by the .database middleware

Values	ISO88591: the default character set value specified for HP Neoview on UNIX.
Default	If not specified, Connection Server uses the character set specified in the database middleware.

11.8.2 Connection Status Available

```
<Parameter Name="Connection Status Available">True</Parameter>
```

Description	Specifies whether the middleware can detect a bad connection (ping function).
Values	True: the middleware can detect a bad connection. False: the middleware cannot detect a bad connection.
Default	The value set in the middleware.

11.8.3 Cost Estimate Available

```
<Parameter Name="Cost Estimate Available">False</Parameter>
```

Description	Specifies if the database middleware supports cost estimation of the SQL query execution. This parameter is only used with Teradata database.
Values	True: the middleware supports cost estimation. False: the middleware does not support cost estimation.
Default	False

11.8.4 Empty String

```
<Parameter Name="Empty String">EmptyString</Parameter>
```

Description	Specifies that certain functions, for example SQL tables, receive either an empty string or a null pointer to replace .missing parameters
Values	.`NullString`: a null string is used .`EmptyString`: an empty string used
Default	`EmptyString`

11.8.5 `ODBC Cursors`

```
<Parameter Name="ODBC Cursors">No</Parameter>
```

Description	Specifies if the ODBC cursor library is used by the data access driver. It can help you to improve the performance of .your system
Values	`Yes`: the ODBC cursor library is used by the data access .driver `No`: the ODBC cursor library is not used by the data access .driver
Default	.The value set in the `cs.cfg` file

11.8.6 `SQLDescribeParam Available`

```
<Parameter Name="SQLDescribeParam Available">True</Parameter>
```

Description	Specifies whether the middleware handles the `SQLDescribeParam` ODBC function. This function helps you describe the parameters of a stored procedure. This .parameter is only used for IBM Informix database
Values	.`True`: the `SQLDescribeParam` function is available `False`: the `SQLDescribeParam` function is not .available
Default	.The value set in the database middleware

11.8.7 SQLMoreResults Available

```
<Parameter Name="SQLMoreResults Available">True</Parameter>
```

Description	Specifies whether the middleware handles the .SQLMoreResults ODBC function This function helps you to retrieve more result sets from SQL execution, if any. This parameter is supported by ODBC .drivers only
Values	.True: the SQLMoreResults function is supported .False: the SQLMoreResults function is not supported
Default	.The value set in the middleware

11.8.8 Use DataDirect OEM Driver

```
<Parameter Name="Use DataDirect OEM Driver">No</Parameter>
```

Description	Specifies whether connections to Microsoft SQL Server .databases can use DataDirect ODBC branded drivers
Values	.Yes: the connection can use the branded driver .No: the connection cannot use the branded driver
Default	No

Related Information

[185 About DataDirect ODBC Drivers [page

11.8.9 V5toV6DriverName

```
<Parameter Name="V5toV6DriverName">{Informix 3.34 32 BIT}</Parameter>
```

Description	Specifies the conversion rule from `Informix Connect` to `Informix ODBC`. The value of this parameter determines which Informix Driver is used to define the ODBC Data Source Name (DSN) without the connection string. This parameter is only used for IBM Informix database.
Values	The exact name of the Informix driver installed on the machine.
Default	The value set in the `cs.cfg` file.

OLE DB SBO Parameters 11.9

These parameters apply to the OLE DB database technology. They are used to configure an OLE DB connection.

These parameters are defined in the `\\<connectionserver-install-dir>\connectionServer\oledb\oledb.sbo` and `\sqlsrv.sbo` files.

`Enumerator CLSID` 11.9.1

```
<Parameter Name="Enumerator CLSID">MSDASQL Enumerator</Parameter>
```

Description	**Note** Do not edit this parameter. Specifies class ID of OLE DB enumerator. This parameter is used with OLE DB only.

`Provider CLSID` 11.9.2

```
<Parameter Name="Provider CLSID">MSDASQL</Parameter>
```

Description	
	i Note .Do not edit this parameter Specifies class ID of OLE DB provider. This parameter is .used with OLE DB only

OLE DB OLAP SBO Parameters 11.10

These parameters apply to the OLE DB OLAP database technology. They are used to configure an OLE DB .connection for OLAP

These parameters are defined in the `\\<connectionserver-install-dir>\connectionServer .\oledb_olap\slqsrv_as.sbo` file

`MSOlap CLSID` 11.10.1

```
<Parameter Name="MSOlap CLSID">msolap.4</Parameter>
```

Description	
	i Note .Do not edit this parameter Specifies class ID of OLE DB provider. This parameter is .used with OLE DB for OLAP only

Sybase SBO Parameters 11.11

These parameters apply to the Sybase ASE/CTLIB SBO file. These parameters are used to configure a Sybase .ASE/CTLIB connection

These parameters are defined in the `\\<connectionserver-install-dir>\connectionServer\sybase .\sybase.sbo` file

11.11.1 Driver Behavior

```
<Parameter Name="Driver Behavior">Dynamic</Parameter>
```

Description	.Specifies which one of the Sybase drivers is used
Values	.`Dynamic`: the ct_dynamic driver is used .Any other value enables the use of the CTLib driver
Default	.`Dynamic`

11.11.2 Password Encryption

```
<Parameter Name="Password Encryption">True</Parameter>
```

Description	Specifies if you want to use the encryption password mechanism specified in the middleware for the password .entered in the *Connection details* dialog box This parameter is used only with Sybase. It is included in the .`Defaults` section for future compatibility
Values	`True`: the encryption password mechanism of the .middleware is used `False`: the encryption password mechanism of the .middleware is not used
Default	.The value set in the `cs.cfg` file

11.11.3 Quoted Identifier

```
<Parameter Name="Quoted Identifier">False</Parameter>
```

Description	Specifies whether quoted identifiers are supported. This .parameter is supported by Sybase middleware only

Values	.`True`: quoted identifiers are supported .`False`: quoted identifiers are not supported
Default	`False`

11.11.4 `Recover Errors`

```
<Parameter Name="Recover Errors">True</Parameter>
```

Description	Specifies whether the Client Library driver is usable after .ct_dynamic driver failure
Values	.`True`: the Client Library driver is used .`False`: the Client Library driver is not used
Default	`True`

11.11.5 `Text Size`

```
<Parameter Name="Text Size">32768</Parameter>
```

Description	**i Note** .This parameter is not mandatory Specifies the maximum size of large variable length binary .or character data supported Large variable length binary or character data retrieved from Sybase CTL database is truncated if larger than 32 KBytes. You add this parameter to the appropriate `Database` .section of the configuration file to avoid the data truncation
Default	`32768`

Teradata SBO Parameters 11.12

These parameters apply to the Teradata SBO files. These parameters are used to configure a Teradata .connection through JDBC or ODBC

These parameters are defined in the `\\<connectionserver-install-dir>\connectionServer\jdbc\teradata.sbo` and `\\<connectionserver-install-dir>\connectionServer\odbc\teradata.sbo` .files

Replace Current Owner With Database 11.12.1

```
<Parameter Name="Replace Current Owner With Database">Yes</Parameter>
```

Description	Specifies if the driver returns the current database name when the data source is queried for the current owner. Only .used with ODBC connections
Values	`Yes`: the current owner is mapped to the Teradata database .name .`No`: the current owner is mapped to the current user name
Default	`No`

Related Information

[149 Teradata Connections - Mapping Teradata Database to Current Owner [page

Configuring Database Capability Parameters 12

About Database Capability Parameters 12.1

Database capability parameters describe capabilities of databases used as sources of data for the contents of a :universe. You can set these parameters to operate at the following levels

- Universe level
  .You set these parameters when you create or modify a universe
- Database level
  You set these parameters in the PRM file of the database. They are overridden by any corresponding .setting at universe level

> **i Note**
>
> To view the operators and functions available for your data access driver, open the `<driver>.prm` file in .an XML editor

About PRM Files 12.2

PRM files provide you with parameters that describe capabilities of databases used as sources of data for SAP BusinessObjects applications. They allow database-dependent factors to control what SQL can be used with the universe, based on the connection and the database that it is attached to. There is a PRM file .corresponding to each database driver

You can configure some database capability parameters from inside a universe. They override PRM file settings .consequently

:PRM files are located in the following folders

- `connectionserver-install-dir>\connectionServer\<RDBMS>` directories, where `<RDBMS>` is> .the network layer or middleware name
- `connectionserver-install-dir>\connectionServer\<RDBMS>\extensions\qt` directories.>
  These PRM files are called extended files. For more information about parameters of extended files, see the .SQL and MDX reference chapter in the *Information Design Tool User Guide*

> **i Note**
>
> .Help text files in other languages are also available in the same directories

PRM Parameter File Structure 12.2.1

There is a PRM file for each supported database driver. Each file is divided into sections, which contain specific .parameters. The following table describes the content and meaning of each PRM file section

File Section	Description
`Configuration`	Parameters used to describe capabilities of databases used as source of data for universes, for example `EXT_JOIN`, `ORDER_BY`, and `UNION`. They are not directly available to any SAP .BusinessObjects product These parameters can be edited to optimize queries run against universes using the target .data access driver **i Note** .They are described in the next chapter
`DateOperations`	Date operators available to universe design tool and information design tool, for example .`YEAR`, `QUARTER`, `MONTH`
`Operators`	Operators available to universe design tool and information design tool, for example `ADD`, .`SUBSTRACT`, `MULTIPLY`

`Functions`	Functions available to universe design tool and information design tool, for example `Average`, `Sum`, `Variance`. See the *Information Design Tool User Guide* for more .information
	
	Help text that appears when functions in this section are selected in universe designer tool and information design tool is listed in the file `<driver><language>.prm`, for example, `oracleen.prm`. This file is found in the same directory as the `<driver>.prm` file. You can .open it to view descriptions of all the functions available in the `<driver>.prm` file
	
	:The `Functions` section has the following child elements
	• .`Group`: whether the usage of this function in a query generates a `group by` clause
	  ○ .`True` sets that the query generates a `group by` clause
	  ○ .`False` sets that the query does not generate a `group by` clause
	• `ID`: this is the name that appears in the *User Objects* function list in Desktop Intelligence. .Deprecated in this release
	• `InMacro`: if this value is `True`, then the function is listed in the *User Objects* function list .in Desktop Intelligence. Deprecated in this release
	• .`Type`: function data type
	• `Arguments`: arguments accepted by the function. A function can have a maximum of .only four arguments, and any additional arguments are not taken into account
	• .`SQL`: the SQL syntax for the function

Related Information

[228 To View and Edit a Function Help Text File [page

To View and Edit PRM Files 12.3

.Browse to the directory that stores the PRM file for your target data access driver .1

PRM files are stored in `<connectionserver-install-dir>\connectionServer\<RDBMS>` .directories

.Open a `<driver>.prm` file in an XML editor .2

.Expand sections as required .3

.Set values by entering the value in the appropriate tag .4

.Save and close the file .5

To Verify and Add Analytic Function Support to PRM Files 12.4

The PRM files may not contain all the analytic functions available in the targeted database. Before using an .analytic function, you should verify that it is present in the file, and if necessary, add it to the list

.You need to update the PRM file only if the function is both analytic and aggregate, such as SUM

.Browse to the directory that stores the extended PRM file for your target data access driver .1

.Open the `<driver>.prm` file in an XML editor .2

:Under the `Configuration` section, verify that the following parameter is present .3

```
<Parameter Name="OVER_CLAUSE">Y</Parameter>
```

.For a definition of this parameter, see the *Information Design Tool User Guide*

.Browse to the directory that stores the PRM file for your target data access driver .4

.Open the `<driver>.prm` file in an XML editor .5

Under the `Configuration` section, verify that the ID of the analytic function is listed in the .6 `ANALYTIC_FUNCTIONS` parameter value

.If not present, type the ID of the function at the end of the list .7

Under `Functions`, add the `Function` section and specify the ID, name, argument types and SQL .8 .definition of the analytic function

```
Function Group="False" ID="<Function_ID>" InMacro="False" >
<"Name="<Function_Name>" Type ="All
```

```
<Arguments>
<Argument Type="<Argument_Type>"></Argument>
...
<Arguments/>
<SQL><SQL_Definition></SQL>
<Function/>
```

→ Remember

Give different names and IDs to a function that is both analytic and aggregate. For example, the name of SUM as aggregate function is SUM. The name of SUM as analytic function is SUM_OVER.

9. Save any modifications and close the file.

You have added support of an analytic function to the information design tool.

You need to restart the information design tool for any changes to the PRM file to take effect.

Related Information

[About PRM Files [page 225]

To View and Edit a Function Help Text File 12.5

The Help text that appears under each function when selected in the universe design tool or information design tool, is maintained in a separate XML file. You can edit and add text to describe a function by editing the `<driver><language>.prm` file. There is a Help text file for each language version of SAP BusinessObjects products installed.

When you add a function to the PRM file, you need to add the Help text for the new function to the appropriate `<driver><language>.prm` file, for example, if you add a function to the `oracle.prm` file, then you also add the function name and the Help text for the function to the `oracleen.prm` file, if you are working with the English version of the tool. See the ISO639-1 standard.

To Edit the Help Text for a PRM Function 12.6

1. Browse to the directory that stores the PRM language file for your target data access driver.

   PRM language files are stored in `<connectionserver-install-dir>\connectionServer\<RDBMS>` directories.

2. Open a `<driver><language>.prm` file in an XML editor.

3. Expand the `Messages` section.
4. To add Help for a new function do the following:
   - Add a new section for a function. The easiest way to do this is to copy an existing function entry and copy it into the `Function` section. You then edit the new function text.
   - Enter Help text for the function.
5. To view or edit existing function Help text, do the following:
   - Expand the `Function` section.
   - Expand the `Message` section for a function.
   - Edit Help text as required.
6. Save and close the file.

PRM Parameter Reference 13

PRM file Configuration Reference 13.1

The database capability parameters are listed alphabetically. To view functions, date operators, and other :operators available, open a `<driver>.prm` file in an XML editor, each parameter is defined in the following tag

```
<Parameter Name="<parameter>"><value></Parameter>
```

.where `<parameter>` is the name of the parameter, and `<value>` is the value attributed to the parameter

:Each parameter is shown with the following information

- Example of how the parameter appears in the XML file
- Description of the parameter
- Possible values that can be set for the parameter
- Default value for the parameter if any

> **i Note**
>
> Certain configuration parameters must not be edited. These parameters have values set for use internally within SAP BusinessObjects solutions. These parameters are described in this section but contain a warning not to edit the value. You must not edit these parameters. Before editing any other `PRM` file .parameter, you should make a backup copy of the `PRM` file

`ANALYTIC_CLAUSE` 13.1.1

```
<Parameter Name="ANALYTIC_CLAUSE">WHEN</Parameter>
```

Description
Specifies which SQL keyword must be used if a function specified in the `ANALYTIC_FUNCTIONS` parameter is .used in the SQL statement

Values	WHEN: indicates a WHEN clause is used. This is the default value for IBM Red Brick databases. QUALIFY: indicates a QUALIFY clause is used. This is the default value for Teradata databases. **Note** Refer to your documentation database to find how it implements the SQL clause.
Default	See values above.

Related Information

[231 ANALYTIC_FUNCTIONS [page

13.1.2 ANALYTIC_FUNCTIONS

```
<Parameter Name="ANALYTIC_FUNCTIONS">RANK,SUM,AVG,COUNT,MIN,MAX</Parameter>
```

Description	Lists the analytic functions supported by the database.
Values	See values in the PRM files.
Default	The listed values.

13.1.3 CALCULATION_FUNCTION

```
<Parameter Name="CALCULATION_FUNCTION">YES</Parameter>
```

Description	Specifies if the database supports calculation functions.
Values	YES: the database supports calculation functions. If so, the information design tool is able to create calculation columns. NO: the database does not support calculation functions.

13.1.4 CONSTANT_SAMPLING_SUPPORTED

```
<Parameter Name="CONSTANT_SAMPLING_SUPPORTED">YES</Parameter>
```

Description	Specifies if the database supports random sampling. Random sampling consists in extracting random rows from .a dataset
Values	.YES: the database supports random sampling .NO: the database does not support random sampling
Default	YES

13.1.5 DISTINCT

```
<Parameter Name="DISTINCT">YES</Parameter>
```

Description	Specifies if the database supports the DISTINCT keyword in .SQL statements. This parameter is used with MS Access
Values	.YES: the database supports the DISTINCT keyword NO: the database does not support the DISTINCT keyword. :This behavior disables the following features • The *Distinct Values* option that appears when you click the *View Values* button in the *Quick Design* wizard of the .universe design tool • The Countdistinct function that appears when you create a condition with the Calculation operand in the .*Query Panel*
Default	YES

13.1.6 EXT_JOIN

```
<Parameter Name="EXT_JOIN">YES</Parameter>
```

Description	Specifies if the database supports outer joins. This parameter is used by all data access drivers.
Values	YES: the database supports outer joins. NO: the database does not support outer joins. The *Outer join* check boxes in the *Edit Join* dialog box of the universe design tool are greyed.
Default	YES

13.1.7 FULL_EXT_JOIN

```
<Parameter Name="FULL_EXT_JOIN">YES</Parameter>
```

Description	Specifies if the database supports full outer joins.
Values	YES: the database supports full outer joins. NO: the database does not support full outer joins.
Default	YES

13.1.8 GROUP_BY

```
<Parameter Name="GROUP_BY">NO</Parameter>
```

Description	Specifies if the database supports the GROUP BY clause in the SQL statements.
Values	YES: the database supports the GROUP BY clause. NO: the database does not support the GROUP BY clause.

13.1.9 GROUP_BY_SUPPORTS_COLUMN_INDEX

```
<Parameter Name="GROUP_BY_SUPPORTS_COLUMN_INDEX">NO</Parameter>
```

Description	Specifies if the database supports the use of column indexes .from the SELECT statement in the GROUP BY clause
Values	`YES`: the database supports the use of column indexes from .the SELECT statement instead of column names `NO`: the database does not support the use of column indexes from the SELECT statement instead of column .names
Default	`NO`

13.1.10 GROUP_BY_SUPPORTS_COMPLEX

```
<Parameter Name="GROUP_BY_SUPPORTS_COMPLEX">NO</Parameter
```

Description	Specifies if the database supports complex expressions in the GROUP BY clause. Complex expressions mean anything than column names or indexes present in the SELECT statement, for example functions or columns absent from the SELECT statement. This parameter is used with IBM .DB2 **i Note** If you run a query containing measure objects and complex objects, that is, objects using functions and concatenation, your application displays the following error message: `Your database does not allow you to do aggregations with the .<object name> object`
Values	`YES`: the database supports complex expressions in the .GROUP BY clause `NO`: the database does not support complex expressions in .the GROUP BY clause
Default	`NO`

13.1.11 GROUP_BY_SUPPORTS_CONSTANT

```
<Parameter Name="GROUP_BY_SUPPORTS_CONSTANT">YES</Parameter>
```

Description	Specifies if the database supports the use of constant objects in the GROUP BY clause. This parameter is used by .IBM DB2 and Microsoft SQL Server databases
Values	`YES`: the database supports the use of constant objects in .the GROUP BY clause `NO`: the database does not support the use of constant .objects in the GROUP BY clause
Default	`YES`

`HAVING` 13.1.12

```
<Parameter Name="HAVING">NO</Parameter>
```

Description	Specifies if the database supports the HAVING clause in .SQL statements
Values	.`YES`: the database supports the HAVING clause .`NO`: the database does not support the HAVING clause
Default	`NO`

`INTERSECT` 13.1.13

```
<Parameter Name="INTERSECT">INTERSECT</Parameter>
```

Description	Specifies the keyword supported by the database for the .INTERSECT set operation
Values	`INTERSECT`: the keyword supported by the database is .INTERSECT No value: the database does not support any keyword for the INTERSECT set operation. In this case, two queries are .generated
Default	`INTERSECT`

INTERSECT_ALL 13.1.14

```
<Parameter Name="INTERSECT_ALL">YES</Parameter>
```

Description	Specifies if the database supports the INTERSECT ALL set operation.
Values	YES: the database supports the INTERSECT ALL set operation. NO: the database does not support the INTERSECT ALL set operation.
Default	YES

INTERSECT_IN_SUBQUERY 13.1.15

```
<Parameter Name="INTERSECT_IN_SUBQUERY">YES</Parameter>
```

Description	Specifies if the database supports the INTERSECT set operation in subqueries.
Values	YES: the database supports the INTERSECT set operation in subqueries. NO: the database does not support the INTERSECT set operation in subqueries.

JOIN 13.1.16

```
<Parameter Name="JOIN">YES</Parameter>
```

Description	Specifies if the database supports a JOIN operation between two tables.

Values	YES: the database supports joins between any columns of two tables. STRUCTURE_JOIN: the database supports joins between two tables that are related with referential constraints. Is identical to NO in this release. NO: the database does not support joins between two tables.

13.1.17 LEFT_EXT_JOIN

```
<Parameter Name="LEFT_EXT_JOIN">YES</Parameter>
```

Description	Specifies if the database supports left external joins.
Values	YES: the database supports left external joins. NO: the database does not support left external joins.

13.1.18 LEFT_OUTER

```
<Parameter Name="LEFT_OUTER">$(+)</Parameter>
<Parameter Name="LEFT_OUTER">$*</Parameter>
```

Description	Specifies the syntax to be used for left outer join expressions.
Values	$(+) : this syntax is used with Oracle. $* : this syntax is used with Sybase, Microsoft SQL Server and IBM Red Brick. **Note** $ represents a join expression.
Default	See values above.
Example	If `table1.col1` is joined to `table2.col2` in Oracle, the expression generated is then : `table1.col1(+) = table2.col2`.

LIKE_SUPPORTS_ESCAPE_CLAUSE 13.1.19

```
<Parameter Name="LIKE_SUPPORTS_ESCAPE_CLAUSE">YES</Parameter>
```

Description	Specifies if the database supports the use of an ESCAPE .clause within the LIKE condition of the SQL statement
Values	YES: the database supports the ESCAPE clause in the LIKE .condition NO: the database does not support the ESCAPE clause in the .LIKE condition
Default	If this setting is not specified, Connection Server retrieves .the information from the database middleware

MINUS 13.1.20

```
<Parameter Name="MINUS">MINUS</Parameter>
```

Description	Specifies the keyword supported by the database for the .MINUS set operation
Values	.MINUS: the database supports the MINUS set operator .EXCEPT: the database supports the EXCEPT set operator No value: the database does not support any keyword for the MINUS set operation. In this case, two queries are .generated
Default	MINUS

MINUS_ALL 13.1.21

```
<Parameter Name="MINUS_ALL">Yes</Parameter>
```

Description	Specifies if the database supports the MINUS ALL set .operation

Values	.YES: the database supports the MINUS ALL set operation NO: the database does not support the MINUS ALL set .operation

MINUS_IN_SUBQUERY 13.1.22

```
<Parameter Name="MINUS_IN_SUBQUERY ">YES</Parameter>
```

Description	Specifies if the database supports the MINUS set operation .in subqueries
Values	YES: the database supports the MINUS set operation in .subqueries NO: the database does not support the MINUS set operation .in subqueries

ORDER_BY 13.1.23

```
<Parameter Name="ORDER_BY">YES</Parameter>
```

Description	.Specifies if the database supports the ORDER BY clause
Values	.YES: the database supports the ORDER BY clause .NO: the database does not support the ORDER BY clause

ORDER_BY_REQUIRES_SELECT 13.1.24

```
<Parameter Name="ORDER_BY_REQUIRES_SELECT">NO</Parameter>
```

Description	Specifies if the database requires columns used in the ORDER BY clause to be referenced in the SELECT .statement

Values	YES: users are not allowed to sort on columns if they are not included in the SELECT statement. In this case, the *Manage Sorts* button is greyed in the *Query* Panel of the universe .design tool NO: users are allowed to sort on columns even if they are not .included in the SELECT statement
Default	NO

13.1.25 ORDER_BY_SUPPORTS_COLUMN_INDEX

```
<Parameter Name="ORDER_BY_SUPPORTS_COLUMN_INDEX">YES</Parameter>
```

Description	Specifies if the database supports the use of column indexes .from the SELECT statement in the ORDER BY clause
Values	YES: the database supports the use of column indexes from .the SELECT statement instead of column names NO: the database does not support the use of column indexes from the SELECT statement instead of column .names

13.1.26 PERCENT_RANK_SUPPORTED

```
<Parameter Name="PERCENT_RANK_SUPPORTED">YES</Parameter>
```

Description	Specifies if the database supports the Percent Rank analytical function. Refer to your database documentation .to find how it implements percent rank
Values	.YES: the database supports Percent Rank .NO: the database does not support Percent Rank
Default	YES

RANK_SUPPORTED 13.1.27

```
<Parameter Name="RANK_SUPPORTED">YES</Parameter>
```

Description	Specifies if the database supports the Rank analytical function in SQL statements.
Values	YES: the database supports Rank. NO: the database does not support Rank.
Default	YES

RIGHT_EXT_JOIN 13.1.28

```
<Parameter Name="RIGHT_EXT_JOIN">YES</Parameter>
```

Description	Specifies if the database supports right external joins.
Values	YES: the database supports right external joins. NO: the database does not support right external joins.

RIGHT_OUTER 13.1.29

```
<Parameter Name="RIGHT_OUTER">$(+)</Parameter>
<Parameter Name="RIGHT_OUTER">*$</Parameter>
```

Description	Specifies the syntax to be used for right outer join expressions.
Values	$(+) : this syntax is used with Oracle. *$: this syntax is used with Sybase, Microsoft SQL Server and IBM Red Brick. **Note** $ represents a join expression.

Default	.See values above

SEED_SAMPLING_SUPPORTED 13.1.30

```
<Parameter Name="SEED_SAMPLING_SUPPORTED">YES</Parameter>
```

Description	Specifies if the database supports seed sampling. Seed sampling is a variation of random sampling in which the .random seed is provided by the user
Values	.YES: the database supports seed sampling .NO: the database does not support seed sampling
Default	NO

SELECT_SUPPORTS_NULL 13.1.31

```
<Parameter Name="NULL_IN_SELECT_SUPPORTED">YES</Parameter>
```

Description	Specifies if the database supports NULL as a column in the .SELECT statement
Values	YES: the database supports NULL as a column in the .SELECT statement NO: the database does not support NULL as a column in the .SELECT statement
Default	YES NO for Teradata, IBM DB2, IBM Informix and IBM Red Brick .databases, which do not support the NULL value as column

SUBQUERY_IN_FROM 13.1.32

```
<Parameter Name="SUBQUERY_IN_FROM">YES</Parameter>
```

Description	.Specifies if the database supports the use of subqueries inside the FROM clause
Values	.YES: the database supports the use of subqueries inside the FROM clause .NO: the database does not support the use of subqueries inside the FROM clause

SUBQUERY_IN_IN 13.1.33

```
<Parameter Name="SUBQUERY_IN_IN">YES</Parameter>
```

Description	Specifies if the database supports the use of subqueries .inside the IN clause
Values	YES: the database supports the use of subqueries inside the .IN clause NO: the database does not support the use of subqueries .inside the IN clause

SUBQUERY_IN_WHERE 13.1.34

```
<Parameter Name="SUBQUERY_IN_WHERE">YES</Parameter>
```

Description	.Specifies if the database supports the use of subqueries inside the WHERE clause
Values	.YES: the database supports the use of subqueries inside the WHERE clause .NO: the database does not support the use of subqueries inside the WHERE clause

TECHNICAL_COLUMN_NAME_PATTERN 13.1.35

```
<Parameter Name="TECHNICAL_COLUMN_NAME_PATTERN">^(-idref)(.)*</Parameter>
```

Description	Specifies that all columns beginning with `-idref` pattern are not displayed in the connections, data foundations and business layers of universes based on OData data sources. Consequently, .the information designer cannot build queries with these columns **i Note** .Do not edit this parameter
Value	`*(.)(idref-)^`

UNION 13.1.36

```
<Parameter Name="UNION">UNION</Parameter>
```

Description	Specifies the keyword supported by the database for the .UNION set operation
Values	.`UNION`: the keyword supported by the database is UNION No value : the database does not support any ekyword for the UNION set operation. In this case, two queries are .generated
Default	`UNION`

UNION_ALL 13.1.37

```
<Parameter Name="UNION_ALL">YES</Parameter>
```

Description	.Specifies if the database supports the UNION ALL set operation
Values	.`YES`: the database supports the UNION ALL set operation .`NO`: the database does not support the UNION ALL set operation

UNION_IN_SUBQUERY 13.1.38

```
<Parameter Name="UNION_IN_SUBQUERY">YES</Parameter>
```

Description	.Specifies if the database supports the use of the UNION set operation in subqueries
Values	.`YES`: the database supports the UNION set operation in subqueries .`NO`: the database does not support the UNION set operation in subqueries

Data Type Conversion Reference 14

Data Type Conversion 14.1

In the information design tool, data foundations expose tables from one or more relational databases, which are the basis for business layers. The data type associated with each table column is displayed in a data foundation with other column details. Business layers expose table columns as metadata objects, like dimensions and hierarchies, and display the data type associated with each object. The following table :describes the mapping between these two sets of data types

Data Type Shown in the Business Layer	Data Type Shown in the Data Foundation
BLOB	BINARY, LONGVARBINARY, VARBINARY
Boolean	BIT
Date	DATE
DateTime	TIME, TIMESTAMP
Long Text	LONGVARCHAR
Numeric	BIGINT, DECIMAL, DOUBLE, FLOAT, INTEGER, NUMERIC, REAL, SMALLINT, TINYINT
String	CHAR, VARCHAR, XML
Unknown	UNDEFINED

i Note

From any database, a time is managed as a DateTime in the BI platform. The date part of the DateTime .should be normally displayed as the current date in end-user reports

The Data Access layer manages the conversion of data types exposed by network layers into Connection .Server data types, which are then mapped to data types exposed in data foundations

This section provides conversion tables between generic network layer data types (JDBC and ODBC) and data foundation data types. It also provides conversion tables for specific network layers such as OLE DB, Oracle OCI, and Sybase CTL, and describes nontrivial conversions and exceptions for specific databases, such as CSV .files, SAP ERP systems, and the SAP HANA database

Related Information

[247 CSV File Data Types [page
[248 JDBC Data Types [page
[250 ODBC Data Types [page
[252 OData Data Types [page
[253 OLE DB Data Types [page
[254 Oracle OCI Data Types [page
[255 SAP ERP Data Types [page
[256 SAP HANA Data Types [page
[257 Sybase CTL Data Types [page
[258 XML Data Types [page

CSV File Data Types 14.1.1

:Syntax

The following table lists the data types declared in DDL files for schema detection of CSV files, and their equivalent in data foundations

.

Data Foundation Data Type	Type Declared in the DDL File
BIT	BIT, BOOLEAN
DATE	DATE
TIME	TIME
TIMESTAMP	TIMESTAMP
DECIMAL	BIGINT, DECIMAL
DOUBLE	FLOAT, DOUBLE, REAL
INTEGER	INTEGER, INT, SMALLINT
NUMERIC	NUMBER, NUMERIC
VARCHAR	VARCHAR

Related Information

[73 CSV Schema Detection [page

JDBC Data Types 14.1.2

:Syntax

.The following table lists the data types that show up through JDBC and their equivalent in data foundations

Data Foundation Data Type	JDBC Data Type
BINARY	BINARY
VARBINARY	VARBINARY
LONGVARBINARY	BLOB, LONGVARBINARY
NUMERIC	BIT, BOOLEAN
LONGVARCHAR	CLOB, NCLOB
DATE	DATE
TIME	TIME
TIMESTAMP	TIMESTAMP
DOUBLE	DOUBLE
FLOAT	FLOAT
REAL	REAL
SMALLINT	SMALLINT
CHAR	CHAR, NCHAR
VARCHAR	LONGNVARCHAR, LONGVARCHAR, NVARCHAR, ROWID, VARCHAR
XML	SQLXML

IBM Informix

The following table lists the data types that could show up in results when the user queries an IBM Informix .database through JDBC, and their equivalent in data foundations. These data types overwrite the generic ones

Data Foundation Data Type	Informix JDBC Data Type
:It can be mapped to the following type • DATE if the Informix data type follows the pattern `DATETIME\\s+(HOUR|MINUTE|SECOND)\\s(+TO\\s+(HOUR|MINUTE|SECOND` • TIME if the Informix data type follows the pattern `DATETIME\\s+(YEAR|MONTH|DAY)\\s+TO\\s(+(YEAR|MONTH|DAY` • TIMESTAMP in the other cases	TIMESTAMP
SMALLINT	BOOLEAN

Microsoft SQL Server

The following table lists the data types that could show up in results when the user queries an Microsoft SQL Server database through JDBC, and their equivalent in data foundations. The data type mapping also depends on the SQL type name associated with the network layer data type. These data types overwrite the generic .ones

Data Foundation Data Type	SQL Type Name	Microsoft SQL Server JDBC Data Type
VARCHAR	"any other value than "xml	LONGVARCHAR
XML	xml	LONGVARCHAR

Oracle

The following table lists the data types that could show up in results when the user queries an Oracle database through JDBC, and their equivalent in data foundations. The data type mapping also depends on the SQL type .name associated with the network layer data type. These data types overwrite the generic ones

Data Foundation Data Type	SQL Type Name	Oracle JDBC Data Type
LONGVARBINARY	any value	BFILE
LONGVARBINARY	BFILE	any value

Data Foundation Data Type	SQL Type Name	Oracle JDBC Data Type
TIMESTAMP	any value	DATE
TIMESTAMP	TIMESTAMP	any value
DOUBLE	any value	BINARY_DOUBLE
DOUBLE	FLOAT	OTHER
REAL	any value	BINARY_FLOAT
CHAR	NCHAR	any value
VARCHAR	NVARCHAR2, ROWID, UROWID	any value

ODBC Data Types 14.1.3

:Syntax

.The following table lists the data types that show up through ODBC and their equivalent in data foundations

Data Foundation Data Type	ODBC Data Type
BINARY	SQL_BINARY
VARBINARY	SQL_VARBINARY
LONGVARBINARY	SQL_LONGVARBINARY
BIT	SQL_BIT
DATE	SQL_DATE, SQL_TYPE_DATE
TIMESTAMP	SQL_DATETIME, SQL_TIME, SQL_TIMESTAMP, SQL_TYPE_TIME, SQL_TYPE_TIMESTAMP
LONGVARCHAR	SQL_LONGVARCHAR, SQL_WLONGVARCHAR
BIGINT	SQL_BIGINT
DECIMAL	SQL_DECIMAL
DOUBLE	SQL_DOUBLE
FLOAT	SQL_FLOAT
INTEGER	SQL_INTEGER

Data Foundation Data Type	ODBC Data Type
NUMERIC	SQL_NUMERIC
REAL	SQL_REAL
SMALLINT	SQL_SMALLINT
TINYINT	SQL_TINYINT
CHAR	SQL_CHAR, SQL_GUID, SQL_WCHAR
VARCHAR	SQL_VARCHAR, SQL_WVARCHAR

IBM DB2

The following table lists the data types that could show up in results when the user queries an IBM DB2 database through ODBC, and their equivalent in data foundations. These data types overwrite the generic .ones

Data Foundation Data Type	DB2 ODBC Data Type
LONGVARBINARY	SQL_BLOB
LONGVARCHAR	SQL_CLOB, SQL_DBCLOB, SQL_LONGVARGRAPHIC
DOUBLE	SQL_DECFLOAT
CHAR	SQL_GRAPHIC
VARCHAR	SQL_VARGRAPHIC
XML	SQL_XML

IBM Informix

The following table lists the data types that could show up in results when the user queries an IBM Informix database through ODBC, and their equivalent in data foundations. These data types overwrite the generic .ones

Data Foundation Data Type	Informix ODBC Data Type
SMALLINT	SQL_BIT

Data Foundation Data Type	Informix ODBC Data Type
LONGVARBINARY	SQL_INFX_UDT_BLOB
:It can be mapped to the following type • DATE if the Informix data type follows the pattern `DATETIME\\s+(HOUR|MINUTE|SECOND)\\s(+TO\\s+(HOUR|MINUTE|SECOND` • TIME if the Informix data type follows the pattern `DATETIME\\s+(YEAR|MONTH|DAY)\\s+TO\\s(+(YEAR|MONTH|DAY` • TIMESTAMP in the other cases	SQL_TIMESTAMP, SQL_TYPE_TIMESTAMP
LONGVARCHAR	SQL_INFX_UDT_CLOB

Microsoft SQL Server

The following table lists the data types that could show up in results when the user queries an Microsoft SQL Server database through ODBC, and their equivalent in data foundations. These data types overwrite the .generic ones

Data Foundation Data Type	Microsoft SQL Server ODBC Data Type
TIMESTAMP	SQL_SS_TIME2, SQL_SS_TIMESTAMPOFFSET
XML	SQL_SS_XML

OData Data Types 14.1.4

:Syntax

The following table lists the Entity Data Model (EDM) data types internal to OData data sources and their .equivalent in data foundations

Data Foundation Data Type	OData Data Type
BINARY	Edm.Binary
BIT	Edm.Boolean

Data Foundation Data Type	OData Data Type
TIMESTAMP **i Note** .Nanoseconds are not mapped	Edm.DateTime, Edm.Time
BIGINT	Edm.Int64
DECIMAL	Edm.Decimal
DOUBLE	Edm.Double
FLOAT	Edm.Float, Edm.Single
INTEGER	Edm.Int32
SMALLINT	Edm.Byte, Edm.Int16, Edm.SByte
VARCHAR	Edm.DateTimeOffset, Edm.Guid, Edm.String

OLE DB Data Types 14.1.5

:Syntax

.The following table lists the data types that show up through OLE DB and their equivalent in data foundations

> **i Note**
>
> For some data types, the mapping depends on the values of `DBCOLUMNFLAGS_ISLONG` and `DBCOLUMNFLAGS_ISFIXEDLENGTH`. parameters associated with each type

Data Foundation Data Type	OLE DB Data Type
VARBINARY	DBTYPE_BYTES
LONGVARBINARY	DBTYPE_BYTES if `DBCOLUMNFLAGS_ISLONG=true`
BINARY	DBTYPE_BYTES if `DBCOLUMNFLAGS_ISFIXEDLENGTH=true`
BIT	DBTYPE_BOOL
DATE	DBTYPE_DBDATE
TIME	DBTYPE_DBTIME

Data Foundation Data Type	OLE DB Data Type
TIMESTAMP	DBTYPE_DBTIMESTAMP
DECIMAL	DBTYPE_DECIMAL
TINYINT	DBTYPE_I1, DBTYPE_UI1
SMALLINT	DBTYPE_I2, DBTYPE_UI2
INTEGER	DBTYPE_I4, DBTYPE_UI4
BIGINT	DBTYPE_I8, DBTYPE_UI8
REAL	DBTYPE_R4
DOUBLE	DBTYPE_R8
NUMERIC	DBTYPE_CY, DBTYPE_NUMERIC
VARCHAR	DBTYPE_STR, DBTYPE_WSTR
LONGVARCHAR	DBTYPE_STR, DBTYPE_WSTR if `DBCOLUMNFLAGS_ISLONG=true`
CHAR	DBTYPE_STR, DBTYPE_WSTR if `DBCOLUMNFLAGS_ISFIXEDLENGTH=true`

Microsoft SQL Server Data Types

The following table shows the data types that could show up in results when the user queries an Microsoft SQL Server database through OLE DB, and their equivalent in data foundations. These data types overwrite the previous ones.

Data Foundation Data Type	Microsoft SQL Server OLE DB Data Type
TIMESTAMP	DBTYPE_DBTIME2, DBTYPE_DBTIMESTAMPOFFSET
CHAR	DBTYPE_GUID
XML	DBTYPE_XML

Oracle OCI Data Types 14.1.6

Syntax:

The following table lists the data types that show up through Oracle OCI and their equivalent in data .foundations

Data Foundation Data Type	Oracle OCI Data Type
BINARY	SQLT_BIN
LONGVARBINARY	SQLT_BFILE, SQLT_BLOB, SQLT_LBI
TIMESTAMP	SQLT_DAT, SQLT_DATE, SQLT_TIME, SQLT_TIMESTAMP, SQLT_TIMESTAMP_LTZ, SQLT_TIMESTAMP_TZ
LONGVARCHAR	SQLT_CLOB, SQLT_LNG
DOUBLE	SQLT_FLT, SQLT_IBDOUBLE
REAL	SQLT_IBFLOAT
NUMERIC	SQLT_NUM
CHAR	SQLT_AFC
VARCHAR	SQLT_CHR, SQLT_RDD, SQLT_RID

SAP ERP Data Types 14.1.7

:Syntax

The following table lists the ABAP data types used by SAP ERP systems and their equivalent in data .foundations

Data Foundation Data Type	ABAP Data Type
BINARY	HEXADECIMAL
DATE	DATE
TIME	TIME
FLOAT	FLOAT
INTEGER	INTEGER
NUMERIC	NUMERIC TEXT, PACKED NUMBER
CHAR	TEXT
VARCHAR	VARIABLE LENGTH STRING

Date Format in SQL Expressions

The date format that the application user must use when building queries in the SQL Expression Editor is .'DATE'yyyy-mm-dd', for example: DATE'2013-04-10

The format is specified in the `jco.prm` extended PRM file with the `USER_INPUT_DATE_FORMAT` parameter. .See the *Information Design Tool User Guide*

Related Information

[225 About PRM Files [page

SAP HANA Data Types 14.1.8

:Syntax

The following table lists the data types used in the SAP HANA database and their equivalent in data .foundations. For more information on SAP HANA data types, see the SAP HANA Data Type Reference

Data Foundation Data Type	SAP HANA Data Type
LONGVARBINARY	BLOB
VARBINARY	VARBINARY
DATE	DATE
TIME	TIME
TIMESTAMP **i Note** SECONDDATE is converted into TIMESTAMP without .milliseconds	LONGDATE, SECONDDATE, TIMESTAMP
FLOAT	DECIMAL, REAL, SMALLDECIMAL
INTEGER	BIGINT, INTEGER, SMALLINT, TINYINT
DOUBLE	DOUBLE
LONGVARCHAR	CLOB, NCLOB, TEXT

Data Foundation Data Type	SAP HANA Data Type
VARCHAR	ALPHANUM, NVARCHAR, SHORTTEXT, VARCHAR

Related Information

SAP HANA Data Type Reference

Sybase CTL Data Types 14.1.9

:Syntax

The following table lists the data types that show up through Sybase CTL and their equivalent in data .foundations

> **i Note**
>
> Sybase CTL data types are values of `datatype` field of `CS_DATAFMT` structure, which is actually exposed by the network layer. The `usertype` field value of the structure is also provided for some data types and .used for mapping by the Data Access layer

Data foundation Data Type	Sybase CTL usertype	Sybase CTL datatype
BINARY	CS_BINARY_USERTYPE	CS_BINARY_TYPE
VARBINARY	CS_VARBINARY_USERTYPE or no value	CS_BINARY_TYPE
VARBINARY	Any value	CS_LONGBINARY_TYPE
LONGVARBINARY	Any value	CS_IMAGE_TYPE
BIT	Any value	CS_BIT_TYPE
DATE	Any value	CS_DATE_TYPE
TIMESTAMP	Any value	CS_BIGDATETIME_TYPE, CS_BIGTIME_TYPE, CS_DATETIME_TYPE, CS_DATETIME4_TYPE, CS_TIME_TYPE
LONGVARCHAR	Any value	CS_LONGCHAR_TYPE, CS_TEXT_TYPE

Data foundation Data Type	Sybase CTL usertype	Sybase CTL datatype
BIGINT	Any value	CS_BIGINT_TYPE, CS_UBIGINT_TYPE
DECIMAL	Any value	CS_DECIMAL_TYPE, CS_MONEY_TYPE, CS_MONEY4_TYPE
DOUBLE	Any value	CS_FLOAT_TYPE
INTEGER	Any value	CS_INT_TYPE , CS_UINT_TYPE
NUMERIC	Any value	CS_NUMERIC_TYPE
REAL	Any value	CS_REAL_TYPE
SMALLINT	Any value	CS_SMALLINT_TYPE, CS_USMALLINT_TYPE
TINYINT	Any value	CS_TINYINT_TYPE
CHAR	CS_CHAR_USERTYPE or CS_NCHAR_USERTYPE or CS_UNICHAR_USERTYPE	CS_CHAR_TYPE
VARCHAR	CS_VARCHAR_USERTYPE or CS_NVARCHAR_USERTYPE or CS_UNIVARCHAR_USERTYPE or CS_SYSNAME_USERTYPE or no value	CS_CHAR_TYPE
CHAR	USER_UNICHAR_TYPE	CS_UNICHAR_TYPE
VARCHAR	USER_UNIVARCHAR_TYPE or no value	CS_UNICHAR_TYPE

XML Data Types 14.1.10

:Syntax

.The following table lists the XML built-in data types and their equivalent in data foundations

Data Foundation Data Type	XML Built-in Data Type
BIT	boolean
• BINARY if a length is defined • VARBINARY	base64Binary, hexBinary

Data Foundation Data Type	XML Built-in Data Type
DATE	date
TIME	time
TIMESTAMP	dateTime
FLOAT	float
DOUBLE	double, decimal
DECIMAL	integer, negativeInteger, nonPositiveInteger, noNegativeInteger, positiveInteger
BIGINT	long, unsignedLong
INTEGER	int, unsignedInt
SMALLINT	short, unsignedShort
TINYINT	byte, unsignedByte
• CHAR if a length is defined • VARCHAR **i Note** Data types derived from string are mapped to CHAR or .VARCHAR	string
VARCHAR	anySimpleType, anyType, anyURI, duration, gDay, gMonth, gMonthDay, gYear, gYearMonth, NOTATION, QName

Mapping of Column Medatata

- .Signed or unsigned is determined from the data type
- .Nullable is determined from the `nullable` and `minOccurs` attributes
- Column size, decimal digits, and display size are determined from the data type. If the type does not give .any indication, a user-configurable maximum length is returned

Large Variable Length Data Restriction 14.2

> **! Restriction**
>
> .The following only relates to Crystal Reports applications

Due to the Data Access layer implementation, the maximum size of a column for large variable length binary :and character data is limited to 16MB for the following data sources

- IBM DB2 through ODBC
- Microsoft SQL Server through ODBC
- Sybase CTL

If an application user inserts large variable length data larger than 16MB into a report, the system performance .may be affected

Data Type Mapping for Multisource-Enabled Universes 14.3

In the case of a multisource-enabled data foundation, the Connection Server data types are converted into the .data types exposed through the Data Federation Service

:Data Federation data types are the following

- BIT
- DATE
- TIME
- TIMESTAMP
- DOUBLE
- DECIMAL
- INTEGER
- VARCHAR

.They are mapped to the corresponding data foundation data types

> **⚠ Caution**
>
> BINARY, VARBINARY, and LONGVARBINARY types are not supported and values of these types are .mapped to NULL

Important Disclaimers and Legal Information

Hyperlinks

.Some links are classified by an icon and/or a mouseover text. These links provide additional information
:About the icons

- Links with the icon : You are entering a Web site that is not hosted by SAP. By using such links, you agree (unless expressly stated otherwise in your :agreements with SAP) to this
  - .The content of the linked-to site is not SAP documentation. You may not infer any product claims against SAP based on this information
  - SAP does not agree or disagree with the content on the linked-to site, nor does SAP warrant the availability and correctness. SAP shall not be liable for any .damages caused by the use of such content unless damages have been caused by SAP's gross negligence or willful misconduct
- Links with the icon : You are leaving the documentation for that particular SAP product or service and are entering a SAP-hosted Web site. By using such links, you agree that (unless expressly stated otherwise in your agreements with SAP) you may not infer any product claims against SAP based on this .information

Beta and Other Experimental Features

Experimental features are not part of the officially delivered scope that SAP guarantees for future releases. This means that experimental features may be changed by SAP at any time for any reason without notice. Experimental features are not for productive use. You may not demonstrate, test, examine, evaluate or otherwise use .the experimental features in a live operating environment or with data that has not been sufficiently backed up
The purpose of experimental features is to get feedback early on, allowing customers and partners to influence the future product accordingly. By providing your .feedback (e.g. in the SAP Community), you accept that intellectual property rights of the contributions or derivative works shall remain the exclusive property of SAP

Example Code

Any software coding and/or code snippets are examples. They are not for productive use. The example code is only intended to better explain and visualize the syntax and phrasing rules. SAP does not warrant the correctness and completeness of the example code. SAP shall not be liable for errors or damages caused by the use of .example code unless damages have been caused by SAP's gross negligence or willful misconduct

Gender-Related Language

.We try not to use gender-specific word forms and formulations. As appropriate for context and readability, SAP may use masculine word forms to refer to all genders

www.sap.com/contactsap

.SAP SE or an SAP affiliate company. All rights reserved 2018 ©

No part of this publication may be reproduced or transmitted in any form or for any purpose without the express permission of SAP SE or an SAP affiliate company. The information contained herein may be changed .without prior notice

Some software products marketed by SAP SE and its distributors contain proprietary software components of other software vendors. .National product specifications may vary

These materials are provided by SAP SE or an SAP affiliate company for informational purposes only, without representation or warranty of any kind, and SAP or its affiliated companies shall not be liable for errors or omissions with respect to the materials. The only warranties for SAP or SAP affiliate company products and services are those that are set forth in the express warranty statements accompanying such products and services, if any. Nothing herein should be construed as constituting an .additional warranty

SAP and other SAP products and services mentioned herein as well as their respective logos are trademarks or registered trademarks of SAP SE (or an SAP affiliate company) in Germany and other countries. All other product and service names mentioned are the trademarks of their .respective companies

Please see https://www.sap.com/about/legal/trademark.html for .additional trademark information and notices

THE BEST RUN SAP