

USER GUIDE | PUBLIC
2020-05-28

SAP 3D Visual Enterprise Viewer

© 2020 SAP SE or an SAP affiliate company. All rights reserved.

THE BEST RUN SAP

Content

1 SAP 3D Visual Enterprise Viewer. 5

2 SAP 3D Visual Enterprise Viewer User Interface. 7

2.1 Presentation Effects. 7

2.2 Main Toolbar. 10

2.3 Menu Bar. 11

File Menu. 12

Edit Menu. 13

Help Menu. 16

2.4 Viewport. 18

Viewport Context Menu Options (3D). 19

Viewport Context Menu Options (2D). 25

2.5 Information Panel. 26

Scene Tree Window. 27

Parts Window. 29

Layers Window. 29

Model Views Window. 30

Steps Window. 31

Collaboration Window. 31

2.6 2D/3D Editor Toolbar. 34

2.7 PMI Information. 40

2.8 Markups and Notes. 40

2.9 Measurement Tools. 41

2.10 Animation Toolbar. 42

2.11 Status Bar. 43

2.12 Keyboard Shortcuts. 44

3 Working with SAP 3D Visual Enterprise Viewer. 48

3.1 Displaying Objects, Model Views, Steps, and Sequences. 49

Selection, Visibility, and Highlighting of Objects. 50

Viewing the Properties of a Scene or Object. 51

Selection of Objects using the Search Function. 53

Selection of Objects using Query. 55

Selection and Activation of Model Views. 86

Selection and Activation of Steps. 86

Selection and Activation of Sequences. 87

Conversations within Collaboration. 88

Dynamic Label. . . . 90
3.2 Display Techniques. . . . 91
3.3 Scene Presentation Effects. . . . 94
Camera Views. . . . 94
Display Menu. . . . 96
Lighting Modes. . . . 98
Smoothing a Selected Object. . . . 99
Moving Objects in a Scene. . . . 100
Detail Views. . . . 101
Cross-Sectional Views. . . . 102
Render Modes. . . . 104
X-Ray Selections. . . . 105
Display Modes. . . . 106
Transforming 2D Images. . . . 107
3.4 Animated Presentations. . . . 108
Animation Toolbar Menu. . . . 109
Animation Options Context Menu. . . . 112
3.5 Measurements. . . . 113
Making Measurements. . . . 114
Making Delta Measurements. . . . 116
To Reposition Dimensions. . . . 117
Measuring Cross Sections. . . . 118
Measurement Global Settings. . . . 119
3.6 Visual Comparison. . . . 121
3.7 Visual Assembly Navigation. . . . 123
Navigating with Visual Assembly Navigation. . . . 124
Using the Navigation Aids. . . . 126
3.8 Working with Computer Graphics Metafiles (CGM). . . . 126
3.9 Printing Files. . . . 129
Print Window. . . . 130
Printer Colors Window. . . . 132
Output Size Window. . . . 134

4 Working with SAP 3D Visual Enterprise Viewer in Office. . . . 136
4.1 User Interface in Office. . . . 136
4.2 Inserting Files in Microsoft Office. . . . 138
4.3 Editing the Active Area. . . . 139
4.4 Deleting Files. . . . 140
4.5 Linking and Embedding Files. . . . 140
4.6 Inserting Internet Shortcuts using SAP 3D Visual Enterprise Viewer. . . . 141
4.7 Updating Internet Shortcuts in Office. . . . 142

5 Electronic Design Automation. 143
5.1 Elements. 145
Selection and Visibility of Elements. 145
5.2 Schematic Sheets. 146
5.3 ECAD Selections. 146
5.4 ECAD Model View. 147

1 SAP 3D Visual Enterprise Viewer

Use

Product visualization is an integral component in modern business software solutions. SAP 3D Visual Enterprise Viewer provides visualization as a permanently available and fully integrated solution component. The viewing functionality is always available to enable the visualization of parts and assemblies when working on tasks within a business process.

With SAP 3D Visual Enterprise Viewer, you can extend correct and uniform product data across the complete enterprise by publishing 2D images and 3D scenes on all industry-standard desktop applications. You can improve the quality of internal and external communication as well as collaboration processes.

SAP 3D Visual Enterprise Viewer is available both as a standalone executable program and as an ActiveX control. The standalone program provides an easy convenient way for viewing files and associated collaboration. 3D files display as standalone files, rather than as objects embedded in Word or PowerPoint. The ActiveX control allows the viewing and collaboration functionality of SAP 3D Visual Enterprise Viewer to be used from web pages, Word documents, PowerPoint Presentations, and other ActiveX compliant applications.

Some of these 3D scenes can include one or more of the following:

- Parts list with or without associated metadata
- Model views
- Animated scenes
- Steps
- PMI Information
- Markups

For information on corrections made after the documentation has been delivered, see SAP Note 1787261.

Features

For a comprehensive viewing experience, SAP 3D Visual Enterprise Viewer provides an extensive range of functions. These functions include, but are not limited to the following:

- Pull-apart and reassembly functions integrated directly in 3D scenes
- Angle and distance measurements, including measurements between vertices, edges, and faces, as well as the determination of arc centers
- Display of cross-sectional views
- Alteration of render modes
- Zooming, panning, flying through, rotating, and walking through scenes
- Display of parts lists associated with 3D scenes
- Playback of steps, procedures, and 3D animations
- Loading and rendering CGM files

SAP 3D Visual Enterprise View supported file formats are listed in the following document.

See https://help.sap.com/http.svc/rc/9f3e81d3c6784f2ba89de44781901e67/9.0.0.7/en-US/VE%20Viewer%20File%20Format%20Support%20Matrix%20version%209.0%20FP07.pdf:

2 SAP 3D Visual Enterprise Viewer User Interface

Definition

When you have opened SAP 3D Visual Enterprise Viewer, the viewer user interface is displayed on the screen of your PC. You can view and display any 2D images and 3D scenes in the user interface. You can also use the wide range of functions offered to supplement your business activities.

The SAP 3D Visual Enterprise Viewer user interface has the following component parts:

- *Menu* bar and toolbar (see Menu Bar and Main Toolbar [page 11])
- Viewport (see Viewport [page 18])
- *Information* panel (see Information Panel [page 26])
- *2D/3D editor* toolbar (see 2D/3D Editor Toolbar [page 34])
- *Animation* toolbar (see Animation Toolbar [page 42])

The controls for using these functions are either available over the viewport, or are contained in the *Information* panel and toolbars at the edges of the user interface.

More Information

Working with SAP 3D Visual Enterprise Viewer [page 48]

2.1 Presentation Effects

Use

You can set the basic appearance as well as the display rendering characteristics of the user interface according to your preferences.

These settings determine the following:

- Whether the toolbars and information panel are permanently displayed
- Whether rollover labels appear for the individual objects within your scene
- How scenes are displayed in the viewport

Once you have made these viewer settings, they remain valid until you change them.

Features

To make your preferred presentation settings, the following context menu options are available in the viewport:

Context Menu Option	Functional Description
Rollover Labels	*Enable*: If selected, part number labels are shown when the mouse is moved over the individual objects in your scene *Use Parent Part Name*: If selected, displays the parent part name as a tooltip when you hover the cursor over geometry within the CAD part or assembly
Rollover Toolbars	Used to determine whether the toolbars are always displayed, or if they become visible only when the mouse is moved to one edge of the user interface
Rotation Performance	Used to simplify the viewport display when panning and rotating models. This ensures that the display frame rate does not drop, causing an irregular display. *Speed*: The model is simplified so that during rotation, the frame rate is kept to a good level. *Quality*: The model is not simplified, and quality is maintained. **i Note** Turn off specular lighting on the *Display Menu* if *Rotation Performance* is set to *Quality*.
Display Renderer	Used to determine how your scenes are rendered in the viewport. By default, the Software Z-Buffer renderer is selected; however, you can change the display renderer at any time.
Use Color Profile	Used to specify whether or not to use a color profile, if color profiling is included in the file being viewed. **i Note** Restart the application to activate this setting.
3Dx Input Settings	Used to control the camera using the 6DOF controller. This option is only available if a 3DConnexion spacemouse is attached and installed.
Settings	Used to set the options for highlighting specific parts in the scene. These settings are also used as the default settings for x-rays.
Background	Used to select color for each half of the viewport's background gradient, and alter the appearance of the background

Context Menu Option	Functional Description
Show Back Facing Geometry	Used to display or hide the reverse side of the model. Note that this setting is not saved with the file.

When the *Display Renderer and Background* menu options are chosen in the *Preferences* menu, submenus for further selections are shown. The *Colors* dialog box is available from the *Background* submenu when you select *Colors*:

> **i** Note
>
> This dialog box is not available when the option *Use Colors Set in File* is selected.

Option	Functional Description
Top Color	Sets the color of the upper half of the viewport's background gradient
Bottom Color	Sets the color of the lower half of the viewport's background gradient
Illustration Top	Sets the color of the upper half of the viewport's background gradient for illustration
Illustration Bottom	Sets the color of the lower half of the viewport's background gradient for illustration
Page Color	Sets the color of the page background when in *Page Layout* mode

The following functions are available from the *Display Renderer* submenu if *HDR* is chosen as the renderer:

Submenu Option	Functional Description
Auto Exposure Control	Automatically adjusts the exposure of the scene
Decrease Exposure	Applies less brightness
Increase Exposure	Applies more brightness
Load Environment Map	Opens the *Load Environment Map* dialog and allows you to place an environment map in the scene.

The *3Dx Input Device Settings* dialog box is available from the *Preferences* context menu when you select *3Dx Input Settings*:

> **i** Note
>
> This dialog is only available if you have a 3dConnexion spacemouse attached and installed.

Option	Functional Description
Device Active	If selected, makes the device active
Zoom Sensitivity	Overrides the device's default setting
Pan Sensitivity	Overrides the device's default setting

Option	Functional Description
Rotate Sensitivity	Overrides the device's default setting. **i Note** For more information refer to the information supplied with your 3dConnexion Spacemouse.

Activities

To enter your preferred viewer user interface settings, right-click the viewport, choose *Preferences* in the context menu, and select the menu options accordingly.

2.2 Main Toolbar

Use

The main toolbar contains icons for frequently used tasks. The main toolbar is located directly under the menu bar, and contains icons for frequently used tasks. For example, opening a file, saving a file, printing the currently displayed scene, and e-mailing a file.

Features

The following options are available from the main toolbar:

Button	Functional Description
	Open a supported file.
	Save to the selected file type (format). **i Note** You cannot save `.cgm` files. This option is not available when you open a `.cgm` file.
	Print the current image on the selected printer.

Button	Functional Description
	Send the currently selected file as an e-mail attachment to another user for collaboration. **i Note** When you e-mail a scene containing collaboration as a `.vds` file, a companion `.xml` file is also created and added to the e-mail
	Access the application help reference system and other helpful information.

2.3 Menu Bar

Use

The menu bar contains options relating to standard functionality in the SAP 3D Visual Enterprise Viewer user interface. From the menu bar you can load and print files, e-mail them, set your preferences, view the import log file, and access the main help.

The menu bar is always located at the top of the user interface, directly under the main window title bar. It uses standard Microsoft Windows conventions.

Features

The menu bar contains three submenus:

- *File*
  Use *File* to manage 2D and 3D files. The *File* submenu includes, but is not limited to, saving and printing options.
- *Edit*
  Use *Edit* to set preferences
- *Help*
  Use *Help* to do the following:
  - Access SAP 3D Visual Enterprise Viewer Help
  - Access the Import log
  - Set the language to use
  - Change user interface language

Related Information

File Menu [page 12]
Edit Menu [page 13]
Help Menu [page 16]

2.3.1 File Menu

Use

The *File* menu is used to manage 2D and 3D files. The available options differ, depending on the current file type.

Features

The following options are available from the *File* menu:

	Functional Description
Open	Opens a 3D file. If the 3D file is not supported by SAP 3D Visual Enterprise Viewer, a message displays in the Viewport.
Reload File	Reloads the currently open file.
Close	Removes the currently loaded scene or image from the Viewport.
Save	Saves the currently loaded file.
Save As	Allows you to save a copy of the currently loaded file. The default file type is always `.vds`. If you are working with `.rh` files, and wish to save to `.rh`, change the registry. For more information, refer to the SAP 3D Visual Enterprise Viewer Administration Guide. **i Note** You cannot save `.cgm` files. The save options are not available when you open a `.cgm` file.

	Functional Description
E-Mail	Sends the currently loaded file as an attachment in an e-mail. The default e-mail client configured is used. **i Note** When you e-mail a scene containing collaboration as a `.vds` file, a companion `.xml` file is also created and added to the e-mail
Print	Allows you to print the current view in the scene. The *Print* window allows you to configure your print configurations and settings before you print.

In addition to these options, a list of recently opened files is also available in the *File* menu (the last eight files that were loaded display).

Related Information

Edit Menu [page 13]
Help Menu [page 16]

2.3.2 Edit Menu

Use

The *Edit* menu contains the *Preferences* option which allows you to change a number of configuration preferences.

Related Information

File Menu [page 12]
Help Menu [page 16]
Settings Window [page 14]

2.3.2.1 Settings Window

Use

The *Settings* window contains a number of tabs that allow you to modify various display, import, and security configuration settings in Viewer. You can access the *Settings* window from the menu bar by navigating to *Edit* > *Preferences*.

Selection Tab [page 14]

Security Configuration Tab [page 15]

JT Import Tab [page 16]

Related Information

Selection Tab [page 14]
Security Configuration Tab [page 15]
JT Import Tab [page 16]

2.3.2.1.1 Selection Tab

Features

The following options are available from the *Selection* tab:

Option	Functional Description
Highlight Effects	Assigns a specific color to highlight the selected objects. • *Highlight Selection*: Highlights the selected object in a particular color. • *Highlight Children*: Automatically x-rays all children of a selected parent object

Option	Functional Description
Flash Highlight	Assigns a type of flashing highlight for the selected object. • *Enabled*: Flash highlighting is on. The following field becomes available. • ○ *Constant*: The highlighted object continually flashes. ○ *Number*: The highlighted object flashes a specified number of times. ○ *Number*: Assigns the number of animated flashes for the highlighted object. For example, the highlighted object continually flashes five times. This field isn't available if you have selected *Constant* as your flash highlight.
Bounding Box	Displays a bounding box around the selected object.
X-Ray Opacity	Determines the opacity of the x-ray.
Reverse Mouse Wheel Zoom Direction	Reverses the default zoom direction for the mouse wheel

Related Information

Settings Window [page 14]

2.3.2.1.2 Security Configuration Tab

Features

The following options are available from the *Security Configuration* tab:

Option	Functional Description
Use Secure Sandbox	Limits access privileges for third party libraries within SAP 3D Visual Enterprise Viewer. This checkbox must be checked.
Enable URL Redirect Protection	If selected, validates URLs before a redirect is performed.
White List	Used to add, modify and delete URLs so that redirected links open if *URL Redirect Protection* is on.

Related Information

Settings Window [page 14]

2.3.2.1.3 JT Import Tab

Use

The *JT Import* tab allows you to choose which model views to load from JT files.

Features

The *JT Import* tab contains a *Load Model Views* drop down menu, which has the following options:

Option	Functional Description
All	Loads all model views.
Top Level	Loads all model views associated with the root node. Model views in other nodes aren't loaded.
Assembly	Only loads model views associated with assemblies.
Parts	Only loads model views associated with parts.
None	No model views are loaded.

By default, the default value for *Load Model Views* is *Top Level*.

Related Information

Settings Window [page 14]

2.3.3 Help Menu

Use

The *Help* menu provides access to the help reference system and other helpful information.

Features

The following options are available from the *Help* menu:

Option	Functional Description
SAP 3D Visual Enterprise Viewer Help	Opens the Help file.
SAP Help Portal	Navigates you to the Visual Enterprise site in the SAP Help Portal (external web page). Internet connection is required for the page to load correctly.
About SAP 3D Visual Enterprise Viewer	Displays copyright and version information, and can be used to copy the information to the clipboard.
Language	Allows you to select an alternative language. While English is the default language, you can change to other languages if necessary. There are 14 languages to choose from (including English, which is the default language for Viewer.
View Import Log	Displays any errors or warnings around the file import. This option is only available once a file has been loaded.

Related Information

Edit Menu [page 13]
File Menu [page 12]
Import Log [page 17]

2.3.3.1 Import Log

The Import Log displays status, warning, and error messages relating to the current file. For example, the status information such as the file version, and revision date for individual files. Any files that are required to open a file, and which cannot be found, are also displayed in the Import Log dialog. For example, material, texture, and DLL files.

Individual messages icons indicate the message type:

Activities

Displaying the Import Log

Do one of the following:

- Choose *Help* > *View Import Log* from the menu bar.
- If a file has loaded with errors, click the link to the Import Log in the status bar.

Copying Information to the Clipboard

To copy the log information to the clipboard:

Click *Copy to Clipboard* in the window.

Related Information

Status Bar [page 43]

2.4 Viewport

Use

The viewport is the main and largest area of the SAP 3D Visual Enterprise Viewer user interface. In the viewport, you can view your 2D images and 3D scenes, and also display them after modifying, activating, or deactivating some of the available functions. Such functions include, for example, the object selection in scenes, the pulling apart of objects and their reassembly, perspective projections, and cross-sectional illustrations. They also enable you to perform measurements on the displayed objects and models.

The viewport is always located in the central part of the user interface, and can occupy the complete area of the interface. However, the actual appearance of the viewport depends on the following factors:

- The selected viewer presentation effects, which determine if the information panel for scene selection and the toolbars are displayed in a rollover fashion, or are permanently shown.
- Whether the scene selected for display is animated or not. The *Animation* toolbar is only shown if the selected scene is animated.
- Activating the left-hand *Information Panel* buttons locks the toolbars to display

Therefore, the three following appearances of the viewport are possible:

- The viewport occupies the complete area of the user interface. This means that the rollover rendering effect is selected. Only when the mouse cursor is moved to one of the four outer edges of the user interface are the information panel, and editing toolbar (the selected scene is not animated), or two toolbars (the selected scene is animated) visible.
- The viewport is bounded on all four sides by the information panel and three toolbars. This means that the permanent rendering effect is selected, and that the selected scene is animated.
- The viewport is bounded on three sides (the top, as well as on the left and right sides) by the information panel and two toolbars. This means that the permanent rendering effect is selected, and that the selected scene is not animated.

Multiple functions can be activated in the user interface, which result in a modified display of the selected scene. Such functions can either be performed from the information panel and the different toolbars, or from the viewport itself.

Related Information

Viewport Context Menu Options (3D) [page 19]
Viewport Context Menu Options (2D) [page 25]

2.4.1 Viewport Context Menu Options (3D)

Use

A number of right-click menus are available within the viewport, providing tools to manage and edit your 3D content.

Features

If you right-click anywhere in the viewport, including directly on the selected model and objects, but without selecting an object, the following context menu appears for a 3D scene:

Context Menu Option	Functional Description
Camera View	Used to select user-defined or preset views.
Display	Used to control all aspects relating to display.
Animation Options	Used to control model animation. **i Note** *Animation Options* is available only if the file includes animation.
Preferences	Used to control the presentation characteristics of the user interface.
Delete	Used to delete selected or all dimensions.
Zoom to Active Object	Used to zoom an object, and thus obtain the best fit.
Zoom Visible	Used to zoom all visible objects, and thus obtain the best fit.
Zoom All	Used to resize all objects, and thus obtain the best fit.

Context Menu Option	Functional Description
Home	Used to return to the initial (starting) object view. The *Home* option behaves in different ways, depending on the contents of the scene. For example: • If there is no activated model view or step, pressing *Home* resets the camera to its original position and direction as if the model was just loaded. • If there is an activated model view, pressing *Home* resets the active model view as if it was activated with double-clicking in the model view panel. • If there is an activated step, pressing *Home* resets the step to the beginning as if it was activated with double-clicking in the steps panel but without playing the animation. In all three cases models are reassembled.
Select All	Used to select all objects in a scene.
Invert Selection	Used to invert the object selection in a scene.
Show All Objects	Used to display all objects.
Hide All Objects	Used to hide all objects.
Add Additional Modules	Used to open the Module Installer Wizard and add any required modules.
Full Screen	Used to display the scene over the whole screen. After you have chosen the *Full Screen* menu option, the *Exit Full Screen Mode* menu option becomes available in its place in the viewport menu.
Exit Full Screen Mode	Used to exit the full screen mode, and return to the standard view again. **i Note** *Exit Full Screen Mode* is available only if the scene is in full screen mode.
Search	Used to open the *Select Objects* dialog box, and then to select objects by name, size, metadata, or run a query to select objects.
Scene Properties	Used to open the *Scene Properties* dialog box, and to then view the scene's properties. Only available when an object or model is not selected.
Object Properties	Used to open the *Object Properties* dialog box, and to then view the object's properties. Only available when at least one object or model is selected.
Print	Used to print the scene currently displayed in the viewport.
Help	Used to open the help file and view the import log.

If you first select one or more individual objects of a 3D scene and then right-click anywhere in the viewport, the following three additional context menu options are shown:

Context Menu Option	Functional Description
Toggle Visibility	Used to toggle between the visibility of selected objects
Hide Selection	Used to hide the selected objects
Hide Unselected	Used to hide unselected objects

When the *Camera View*, *Display*, *Animation Options*, *Preferences*, and *Delete* menu options are chosen in the menu for the 3D viewport, submenus for further selections are shown.

Related Information

Animation Options Context Menu [page 112]
Camera Views [page 94]
Display Menu [page 96]
Lighting Modes [page 98]
Presentation Effects [page 7]
Smoothing a Selected Object [page 99]
Viewport Context Menu Options (2D) [page 25]

2.4.1.1 Select Objects Window

You can select multiple objects in a variety of different ways by using the Select Objects window. In addition, you can select whether to view all objects that meet the criteria, only visible objects, or previously selected objects.

The window comprioses tabs and selection tools used to select objects automatically, and a list that displays all the objects in the current scene. This list can be used to manually select objects.

Activities

To open the *Select Objects* window, choose *Search* from the viewport context menu.

2.4.1.1.1 Name Tab Page

Use

You can use the *Name* tab page in the *Select Objects* window to select objects in the scene by name. You can also nominate a specific type of object for which you are searching.

Features

The tab page offers the following features:

Elements	Functional Description
Search For	Selects objects using the letters contained in their names:
Include Metadata	Includes metadata in the search
Case Sensitive:	Selects objects by name using upper and lowercase characters
Search In	Selects the search area. The initial state is *All Objects*. • *All Objects* • *Current Selection* • *Visible Objects*
Use Descriptions	Checks Layer description for search
Select	Selects the specified objects in the scene
Name	Displays the name of the found object
Vertices	Displays the number of vertices in the object
Faces	Displays the number of faces in the object

2.4.1.1.2 Size Tab Page

Use

You can use the *Size*tab page in the *Select Objects* window to select objects in the scene by their bounding box size.:

Features

The tab page offers the following features:

Elements	Functional Description
Bounding Box Diagonal	Selects objects by size from smallest to largest. These are numerical entry search type controls, and accept only numbers (with dot), for size, polygons count, and vertices counts.
Size	Determines a specified size
Find	Selects the search area. The initial state is *Find Smaller Objects*.
Select	Selects all found objects in the scene
Name	Displays the object name
Vertices	Displays the number of vertices
Faces	Displays the number of faces

2.4.1.1.3 Metadata Tab Page

Use

You can use the *Metadata* tab page in the *Select Objects* window to select objects in the scene by their associated metadata.

Features

Field	Functional Description
Category	Selects objects using a metadata category
Key Name	Selects objects by their metadata key properties
Key Value	Selects objects by a value in the metadata key properties
Select	Selects all found objects in the scene

2.4.1.1.4 Query Tab Page

You can use the *Query* tab page in the *Select Objects* window to run queries to select objects in the scene. For further information on *Query*, see Query [page 55].

The tab page offers the following features:

Elements	Functional Description
Query Name	Indicates the name of the query. If this is a new query, the name will be `untitled.rhq` until the query is saved.
	Creates a new query
	Loads an existing query, (`.rhq` file)
	Saves a query
	Saves a newly created query as a Query (`.rhq`) file
	Selects and runs an existing query
	Deletes the current query
	Keeps the query window visible when the *Run* button is clicked. This allows the checking of each statement's results.

Elements	Functional Description
	Makes the query window disappear when the *Run* button is clicked. This allows slightly faster execution.
Initial Scene Setup	Selects what happens initially in the scene. • *Do Nothing* : The scene is displayed as normal • *Show All Objects*: All objects in the scene are shown • *Hide All Objects*: All objects in the scene are hidden • *Resume All*: Resumes all objects and viewports
Statement #	If selected, indicates that the statement is active in the query • *Add Filter*: Adds a new filter to the current statement in the query • *Add Action*: Adds a new action to the current statement in the query
Add Statement	Adds a new statement to the query
	Deletes a filter, action, or statement in an existing query
	Moves the selected filter, action, or statement up in the list
	Moves the selected filter, action, or statement down in the list

More Information

Filters [page 56]

2.4.2 Viewport Context Menu Options (2D)

Use

For 2D images, a context menu similar to the 3D context menu is displayed when you right-click the viewport. However, the *Camera View*, *Animate Options*, and some *Display* menu options are not available. (The background options from the *Preferences* menu are available).

Related Information

Viewport Context Menu Options (3D) [page 19]

2.5 Information Panel

Use

The *Information* panel is situated on the left-hand edge of the user interface. Depending on the presentation settings, the information panel can be either visible or not when SAP 3D Visual Enterprise Viewer is displayed. If the panel is not visible, the rollover toolbar selection has been chosen. The *Information* panel becomes visible when the cursor is moved to one of the four outer edges of the user interface. The *Information* panel comprises the following:

- Scene tree (see Scene Tree Window [page 27])
- Parts (see Parts Window [page 29])
- Layers (see Layers Window [page 29])
- Model views (see Model Views Window [page 30])
- Steps (see Steps Window [page 31])
- Collaboration (see Collaboration Window [page 31])

The six icons in the *Information* panel open six separate windows. Using the contents of the *Information* panel, you can, for example, display, hide, and select scene components.

In addition, the panel displays further icons, if the file being viewed contains either PMI or markups. These icons do not open separate windows, but are available to display and hide these components.

If the file being viewed contains PMI information, the Information panel displays the following:

- *Show/Hide all PMI*
- *PMI Points on Top*

If the file being viewed contains markups, the Information displays the following:

- *Markups*
- *Minimize all Notes*

The available components of the information panel vary, depending on the contents of the file. For example, if a file does not contain steps, model views, or PMI, these components do not display.

Activities

To display the windows offered in the information panel, choose the appropriate icons:

- The  icon displays the *Scene Tree* window

- The  icon displays the *Parts* window
- The  icon displays the *Layers* window
- The  icon displays the *Model Views* window
- The  icon displays the *Steps* window
- The  icon displays the *Collaboration* window

2.5.1 Scene Tree Window

Use

The upper part of the *Scene Tree* window contains the 3D object list node, while the lower part contains the associated metadata information. All the available information concerning your particular scene selection is provided in the *Scene Tree* window. With regard to a particular scene, it's used to show, hide, and select objects, display model views, and run individual steps, or all the steps belonging to a complete procedure.

When you create measurements in a scene, the corresponding objects are displayed in the *Scene Tree* window. Using the visibility functions provided in the *Scene Tree* window, these measurements can be hidden and are no longer shown in the scene.

Features

3D Objects List Node

The functions provided by the different parts of the *Scene Tree* window are the following:

The  node contains all the object folders belonging to your selected scene. It presents, and is used to control all of a scene's objects and materials within a tree-view hierarchy. The associated checkboxes are used to display and hide the objects. With the checkboxes, you can, for example, display an individual object or a number of objects. You can also display a group of objects, or all objects. When an object is visible, it's shown in the scene.

To select objects, click the appropriate object name or names. When objects are selected, their names are highlighted. The way in which they're shown in the scene depends on your selection settings, which are located in the *Settings* dialog box.

> **i** Note
>
> Suppressed nodes and procedures, along with their child nodes and child steps respectively, aren't displayed in the scene tree.

If you use measurements in the scene, and display the measurement results in the scene, these measurements are also shown in the 3D Objects List node. Such measurements are either located in a *Dimensions* folder under a single object, or in the root level of the scene tree if a measurement between different objects was made.

The object folders are organized in a hierarchy, and if the highest level checkbox is deselected, all subordinate checkboxes are also deselected.

A checkbox is also associated with objects that have attached callouts. With these checkboxes, you can control whether the callouts associated with objects are visible in the scene or not. Callouts are a type of markup used to emphasize individual objects. They're numbered or referenced by name. This type of markup enables explanatory object notes to be provided in accompanying documentation.

> **i Note**
>
> Callouts must be authored to the scene, therefore not all scenes have callouts available, though they have a parts list of objects by ID.

If you right-click any one of the scene's objects or dimensions under the 3D objects list node, the following context menu appears:

Context Menu Option	Functional Description
Select All	Selects all scene objects
Invert Selection	Inverts the object selection
Select Sub-Objects	Selects all subordinate objects from a hierarchical superior object
Show All Objects	Shows all scene objects
Show Selection	Shows the selected objects only
Hide All Objects	Hides all scene objects
Hide Selection	Hides the selected objects
Hide Unselected	Hides the unselected objects
Export BOM Hierarchy	Opens the *Export BOM Hierarchy* window, and allows you to create your export settings for the resulting `xml` or `csv` file. Settings include an export location and whether to include metadata.
Object Properties	Displays the object properties of an individual object

> **i Note**
>
> The *Select Sub-Objects* menu item is only provided for hierarchical superior objects and for the 3D objects list node.

If you right-click the 3D Objects List node at the top of the scene tree, the following context menu appears:

Context Menu Option	Functional Description
Select All	Selects all scene objects
Show All Objects	Shows all scene objects

Context Menu Option	Functional Description
Hide All Objects	Hides all scene objects
Export BOM Hierarchy	Opens the *Export BOM Hierarchy* window, and allows you to create your export settings for the resulting `xml` or `csv` file. Settings include an export location and whether to include metadata.
Scene Properties	Displays the properties of the complete scene
Collapse Scene Tree	If it's expanded, collapse the scene tree

Metadata

When an object, an object group, or the whole 3D object list is selected, the selected name is highlighted in the list. If metadata has been saved for the object, object group, or 3D object list, the metadata is displayed in the lower part of the *Scene Tree* window. The metadata list contains the properties and values of the selected object, object group, or 3D object list. Any hyperlinks that exist are highlighted and interactive.

2.5.2 Parts Window

The *Parts* window displays a list of all the parts (objects) that are associated with the current 3D scene. It lists the identification (ID) and name of objects used in the scene. It also indicates the number of times (count) an object is used in the scene. However, it only displays the objects that are part of the selected BOM source. You can select objects by choosing them individually or in groups.

If you right-click a single listed object, the following context menu is shown:

Context Menu Option	Functional Description
Select All	Selects all scene objects
Invert All	Inverts the object selection
Export BOM	Exports the Part list to an `xml` file or `csv` file.

2.5.3 Layers Window

The *Layers* window displays a list of all the layers that are associated with the current scene. Layers are used to group scene objects into a single hierarchy level and provide an alternate way to group, manage, and display scene geometry and elements. Layers are not related to the scene's hierarchy. For example, a scene could contain an electrical wiring and a plumbing layer. These will already exist in the scene.

If you right-click a single listed layer, the following context menu is shown:

Context Menu Option	Functional Description
Show Selected	Used to show the selected layer only
Show Unselected	Used to show the unselected layer only
Show All	Used to show all scene objects
Hide Selected	Used to hide the selected scene layer only
Hide Unselected	Used to hide the unselected layer only
Hide All	Used to hide all scene objects
Invert Selection	Used to invert the object selection

2.5.4 Model Views Window

Use

The *Model Views* window contains all model views associated with the current 3D scene. If applicable, the model views are grouped in one or more portfolios. The properties associated with each model view and each portfolio are also available in the *Model Views* window.

Features

To activate the model view, you can left-click directly on it or you can right-click the selected model view or portfolio and display the following context menu:

Context Menu Option	Functional Description
Activate Model View	Used to activate the selected model view and display it as a scene
Copy Link to Clipboard	Used to copy the model view link to the clipboard. It is then available to paste to another location
Properties	Used to open the *Model View Properties* window if a model view is selected, or the *Portfolio Properties* window if a portfolio is selected.

If you choose the *Properties* menu option with a model view selected, the *Model View Properties* window opens, and if you choose the *Properties* menu option with a portfolio selection, the *Portfolio Properties* window opens. Both contain the fields shown in the following table.

Field	Functional Description
Name	The portfolio or model view's name
Description	The portfolio or model view's description
Keywords	Any keywords associated with the portfolio or model view

2.5.5 Steps Window

The *Steps* window contains a list of all steps associated with the current 3D scene. If applicable, the steps are grouped in one or more procedures. To play the selected procedure or step in a scene, you can double-click it, or you can right-click the selected step or procedure and display the following context menu:

Content Menu Option	Functional Description
Play Steps/Play Step	Used to play the selected procedure or step in a scene
Copy Link to Clipboard	Used to copy the step link to the clipboard. It is then available to paste to another location
Properties	Used to open the *Steps Properties* window, if a step is selected, or the *Procedure Properties* window if a procedure is selected

If you choose the *Properties* menu option for individual steps or for a procedure, the *Properties* window opens. It displays the *Name*, *Description*, and *Keywords* fields indicated in the following table:

Field	Functional Description
Name	The step's name
Description	The step's description
Keywords	Any keywords associated with the step or procedure

2.5.6 Collaboration Window

Use

You can use the *Collaboration* window to create and edit various kinds of comments. The comments can be used to direct attention to, and identify parts of a model. The *Collaboration* tools enable you to create conversations containing a number of different comment types.

Using these tools, you can do the following:

- Create note, line, and shape comments.
- Modify the conversation and user colors.
- Hide and show comments.
- Delete conversations

- Project red-line comments onto the surface of the model

> **i Note**
>
> Comments can't be edited. You can view the properties by double-clicking the comment.

The following general statements apply to all comments made within a scene:

- You can only delete comments and conversations in the *Collaboration* window.
- When you select a comment in the *Collaboration* window, it displays on the screen as active. The comment displays as it was written, with the correct camera angle and zoom.
- Multiple comments in the conversation always appear on the image, but only the selected comment is active. The nonactive comments appear faded and the camera angle and zoom may not be as they were when they were created.
- You activate comments in the *Collaboration* window for them to display as authored with the correct camera angle.

To delete a comment or conversation, you can call up the following context menu:

Content Menu Option	Functional Description
Delete	Used to delete the comment or conversation
Deselect All	Used to deselect all comments. They aren't deleted.

Features

Elements	Functional Description
	Creates a new conversation

Elements	Functional Description
Comment Type	Determines the type of comment to be added •  •  •  •  •  •  • 
Redline Type	Determines the type of redline to be added. •  •  •  •  •  •  •  • 

Elements	Functional Description
	Selects custom colors for the text of comments, using the color selector **i Note** The toolbar color buttons reflect the currently selected color. Any changes that you make to the three color settings are applied to all comments that are later created.
	Selects custom colors for the comment background
	Selects custom colors for the comment lines
	Deletes a conversation, or a specific comment from a conversation
	Projects the redline comment onto the surface of the model

More Information

Conversations within Collaboration [page 88]

2.6 2D/3D Editor Toolbar

Use

The *2D/3D Editor* toolbar is situated on the right-hand edge of the user interface. Depending on the selected viewer presentation effects, the *2D/3D Editor* toolbar can be either visible or not when SAP 3D Visual Enterprise Viewer is activated. If the *2D/3D Editor* toolbar isn't visible, the rollover toolbar selection has been chosen. The *2D/3D Editor* toolbar becomes visible when the cursor is moved to one of the four outer edges of the user interface.

The functions in the *2D/3D Editor* toolbar enable you to view your scenes in many different ways, and to use numerous different modes of scene display. The *2D/3D Editor* toolbar is dynamic, in that the functions that are available depend on whether the image format of the opened file is 2D or 3D. The available functions also vary depending on file type. For example, the available options differ between RH and VDS files.

3D scenes can be rotated, pulled apart, and zoomed. They can also be shown in a page layout, or as a standard or full screen view. In addition, various X, Y, and Z plane-orientated cross-sectional views can be displayed at all

possible positions in a scene. 2D images can be panned, zoomed, transformed, and shown in page layout or full screen.

The different modes of display for 3D scenes include pull apart, cross-sectional, as well as a variety of render modes. The pull apart mode enables you to view your scenes when selected objects have been removed from them. The cross-sectional modes include capped and uncapped displays, as well as views that can incorporate outlined areas in different colors. The available scene render modes can include wired, transparent, and shaded displays, as well as lined illustrations.

Features

3D Editor Toolbar

The following table lists the maximum number of functions shown in the *2D/3D Editor* toolbar for 3D models.

Icon	Functional Description
	Rotates a scene.
	Rotates models in the 3D viewport. This tool in a similar fashion to the *Orbit* (rotation) tool, but with a restriction whereby the camera only rotates around the horizontal or vertical axis.
	Moves the camera through the 3D scene as though you're walking on the plane of the ground. **i Note** The following functions are available only in *Walk* mode. • : Looks around the scene in your current position. • : Sets the starting position and camera height.
	Moves the camera through the 3D scene as if you're flying. The *Fly* tool differs from the *Walk* tool, in that it doesn't fix the camera to a particular height. With the *Fly* tool, you can navigate forward and backward, controlling your speed, or simply stop and look around from your current position.
	Pans the scene.

Icon	Functional Description
	Drills down on an assembly and associated subassemblies visually. This tool is an alternative to navigating through the scene tree. **i Note** The following functions are only available in *Visual Assembly Navigation* mode. • : Assigns color to each assembly in the scene • : Displays all assemblies in the scene as transparent, except the selected assembly
	Reassembles the model in VAN Mode.
	Shows the model as disassembled during navigation.
	Opens the *VAN Settings* window, and assigns assembly colors and animation speed for navigation.
	Animates a visual assembly navigation.
	Moves one or more objects from their original position in the scene.
	Returns moved objects back to their original position in the scene.
	Visualizes the way in which images and scenes in the 3D viewport display on a printed page.
	Returns to the initial (starting) scene. **i Note** Once a model view or step is activated, the *Home* button returns to the first frame of the current model view or step. This function isn't available when viewing assemblies.

Icon	Functional Description
	Provides a best fit of the scene in the user interface, or to zoom a selected section of the scene.
	Provides different cross-sectional views of the scene.
	Carries out measurement activities and provides further options for measurement.
	Assigns specific colors to objects so that the version to which they belong is easily distinguishable.
	Displays the scene in many different renditions. **i Note** The number of available model render modes is reduced when working with VDS files.
	Displays the scene as a perspective or orthographic projection.
	Displays objects as transparent in the viewport. For more information, see X-Ray Selections [page 105]
	Alternates between a full screen and a standard-sized display. For more information, see Display Modes [page 106].

2D Editor Toolbar (Raster)

The following table lists the maximum number of functions shown in the *2D/3D Editor* toolbar for 2D raster images. These options are used to transform 2D images and are only available if the image format of the opened file is 2D.

Icon	Functional Description
	Visualizes the way in which images in the user interface display on a printed page.
	Provides a best fit of the image in the user interface, or to zoom a selected section of the scene.
	Carries out measurement activities and provides further options for measurement.

Icon	Functional Description
	Rotates the image in a clockwise direction.
	Rotates the image in a counter clockwise direction
	Flips the image horizontally
	Flips the image vertically
	Fits the image to the screen
	Displays the image at its original size
	Applies grayscale to the image
	Displays or hides all smoothing.
	Assigns specific colors to objects so that the version to which they belong is easily distinguishable. **i Note** Visual Compare isn't available when working with VDS files
	Alternates between a full screen and a standard-sized display.

2D Editor Toolbar (Vector)

The following table lists the maximum number of functions shown in the *2D/3D Editor* toolbar for 2D vector images. These options are used to transform 2D images and are only available if the image format of the opened file is 2D.

Icon	Functional Description
	Visualizes the way in which images in the user interface display on a printed page

Icon	Functional Description
	Returns to the initial (starting) scene. **i Note** Once a model view or step is activated, the *Home* button returns to the first frame of the current model view or step. This function isn't available when viewing assemblies.
	Provides a best fit of the image in the user interface, or to zoom a selected section of the scene
	Carries out measurement activities and provides further options for measurement.
	Assigns specific colors to objects so that the version to which they belong is easily distinguishable. **i Note** Visual Compare isn't available when working with VDS files
	Alternates between a full screen and a standard-sized display. For more information, see Display Modes [page 106].

2D Editor Toolbar (CGM and PDF)

The following table lists the maximum number of functions shown in the *2D/3D Editor* toolbar for CGM vector images. These options are used to transform 2D images and are only available if the image format of the opened file is CGM. PDF files display a subset of these functions. For example, you don't see metadata or hotspot functionality.

Icon	Functional Description
	Views metadata associated with the selected hotspot
	Switches on or off the visibility of layers in the viewport.
	Adjusts the view to show the extent of the CGM illustration
	Switches on or off the highlighting of all hotspot areas.
	Rotates the image in a clockwise direction
	Rotates the image in a counter clockwise direction
	Flips the image horizontally

Icon	Functional Description
	Flips the image vertically

Related Information

Display Techniques [page 91]

2.7 PMI Information

Use

In the *Information* panel, there are also options relating to the display of product manufacturing information, if the file that you are viewing contains it. Showing and hiding PMI always applies by default, to the activated viewport.

If a file contains points, you can use the  icon in the *Information* panel to ensure that the points remain on top. This can be useful for points visualization in an extremely large and complex scene. This option set the points to the highest render order. Both icons pertaining to PMI act as on or off toggles.

Features

If you want to view PMI information, click the  icon on the information panel.

2.8 Markups and Notes

Use

In the *Information* panel, there are also options relating to the display of markup and note information, if the file that you are viewing contains them. For markups to be displayed on an image or model, the *Show Markups* option must be selected on the *Information* panel. The icon pertaining to markups acts as an on or off toggle.

Features

If you want to view markup information, click the  icon on the *Information* panel.

2.9 Measurement Tools

Use

The measurement tools are contained within the *2D/3D* toolbar. When the measurement tool is not in use, it contains a single icon with a . Depending on the previous measurement activity, this icon is either the *Distance* or *Angle* icon. The tool expands in the toolbar to show object elements when it is selected.

To facilitate your measurements, rollover-highlighting is implemented. Object elements in a scene, namely vertices, edges, faces, and arcs, are highlighted when you move the cursor over them. To carry out your measurements, you simply click the relevant highlights and the result then appears in your scene. To simplify the performance of your specific measurements, you can determine which object elements are currently active and in this way limit highlighting in your scene.

You can also calibrate the scene. Calibration allows you to create or overwrite the scale within the scene. Scale is specified by selecting two points anywhere in the image and then specifying units and distance.

Features

If you want to carry out a measurement activity, click either the icon or the arrow in the measurement tool. If you click the arrow, a dropdown menu displaying the menu options in the following table is shown.

If you click the icon itself, the dropdown menu is skipped. A measurement selection, according to whether the *Distance* or *Angle* icon is displayed, can commence directly (see the following table for more information).

Menu Option	Functional Description
	Performs distance measurements, either for a single object or between two objects
	Performs angle measurements, either for a single object, or between two objects
	Measures coordinate rather than direct distance; that is, delta for the world axes x, y and z

Menu Option	Functional Description
	Moves measurements after initial placement in the viewport
	Creates or overwrites the scale within the scene or image
	Modifies measurement global settings, which influence the appearance of measurements in a scene

2.10 Animation Toolbar

Use

The *Animation* toolbar is only visible when the selected scene is animated. The *Animation* toolbar is situated at the bottom edge of the user interface. Depending on the selected viewer presentation effects, the *Animation* toolbar can be either visible or not when SAP 3D Visual Enterprise Viewer is activated. If the *Animation* toolbar is not visible, the rollover toolbar selection has been chosen. The *Animation* toolbar becomes visible when the cursor is moved to one of the four outer edges of the user interface.

There are two distinct modes, depending on whether you are viewing a file with steps, or whether the file has only sequences.

Features

The *Animation* toolbar is used to control scene animation. It consists of a time/frame slider and the following four control elements:

Control Element	Functional Description
	Used to return to the previous step, and play the animation sequence (begin sets the animation to the first frame)
	Used to play the animation sequence. The function of the button changes to stop as soon as the animation starts. When you press stop and then play the scene again, the animation sequence starts from the beginning, not from where you stopped.

Control Element	Functional Description
	Used to move to the next animation step, and play the animation sequence (end sets the animation to the last frame)
	Used to play all the animation sequences from the first to the last sequence. Note that this is available only for scenes that contain steps.

> **i** Note
>
> The *Animation* toolbar control element names not shown in parenthesis in the table indicate the default names for steps. However, when sequences, which are not step-based are played, the names shown in parenthesis are valid.

The time/frame slider shows the real-time status of the animation in progress, the current frame number, and the total number of frames. To manually control an animation, you can drag the time/frame slider forwards and backwards as required.

The *Animation* toolbar also provides an *Animation* toolbar menu.

Related Information

Animated Presentations [page 108]

2.11 Status Bar

The Status Bar displays at the bottom of the viewport. If any error is triggered during file load, the Status Bar displays after loading completes, and indicates that there is a problem with the file. It does not display by default.

Only error category messages are shown in the Status Bar. Warnings or informational messages only appear in import log, not on the status bar.

The Status Bar includes four components:

- Error Icon: Indicates the error type.
- Error Text: Displays the text of the most recent error message.
- Open Import Log: A link to the import log.
- Close button: Hides the status bar.

Related Information

Import Log [page 17]

2.12 Keyboard Shortcuts

Keyboard shortcuts in Visual Enterprise Viewer.

There are a number of pre-assigned keyboard shortcuts; keyboard alternatives to program functions.

If a keyboard shortcut is available for a command, it is displayed to the right of the command name on the menu.

3D Navigation Shortcuts

User Interface Function	Keyboard Shortcut
Roll camera (move camera around viewing axis)	SHIFT + drag
Pan scene (rotate camera around its own axis)	LEFT ARROW, RIGHT ARROW
Truck in (move camera into scene to view more closely) **i Note** The focal point is a fixed distance from the camera.	UP ARROW
Truck out (move camera out from scene to view more distantly) **i Note** The focal point is a fixed distance from the camera.	DOWN ARROW
Zoom in (narrow the camera angle (FOV) to magnify scene)	+
Zoom out (widen camera angle (FOV) to reduce scene magnification)	-
Change camera angle (FOV)	SHIFT + right click + drag
Zoom to extents (fit scene to viewport/screen)	CTRL + +
Restore to default camera view	*
Control camera height in Walk mode	SHIFT + left-click + drag
Step forward/backward in Walk mode	UP ARROW, DOWN ARROW
Make left and right turns in Walk mode	LEFT ARROW, RIGHT ARROW

User Interface Function	Keyboard Shortcut
Move the camera up/down/left/right in Walk mode	SHIFT + ANY DIRECTIONAL ARROW
Increase speed in Walk mode by increments of 1	2
Decrease speed in Walk mode by increments of 1	1
'Fly' to object	ALT + V
Increase/decrease speed in Fly mode by increments of 1	1, 2, 3 UP ARROW, DOWN ARROW
Slow down while flying	SHIFT
Cancel Fly Mode	F9

Render Mode Menu Shortcuts

User Interface Function	Keyboard Shortcut
Bounding Box render mode	CTRL + 1
Transparent Bounding Box render mode	CTRL + 2
Vertices render mode	CTRL + 3
Wireframe render mode	CTRL + 4
Solid render mode	CTRL + 5
Transparent render mode	CTRL + 6
Solid Wireframe render mode	CTRL + 7
Transparent Wireframe render mode	CTRL + 8
Toggle scene bounding box	CTRL + B
Toggle back-facing geometry	CTRL + H
Toggle vertices	CTRL + I
Toggle cameras and lights	ALT + L
Toggle cross section	ALT + X

General Shortcuts

User Interface Function	Keyboard Shortcut
Toggle Full-screen and Standard display modes	F11
Return to Standard display mode from Full-screen mode	ESC or F11

User Interface Function	Keyboard Shortcut
Display a viewport grid	CTRL + G
Display a shadow	CTRL + F
Toggle Orthographic and Perspective Projection	P

HDR Renderer Shortcuts

User Interface Function	Keyboard Shortcut
Enable HDR renderer	ALT + F9
Auto Exposure control	ALT + F10
Decrease exposure	ALT + F11
Increase exposure	ALT + F12

Lights Menu Shortcuts

User Interface Function	Keyboard Shortcut
Display lights from file	ALT + 0
Display white lights	ALT + 1
Display daylight	ALT + 2
Display hard lights	ALT + 3
Display colored lights red/green	ALT + 4
Display colored lights blue/green	ALT + 5
Display blue lights	ALT + 6
Display marsiano (red) lights	ALT + 7
Display single white light from eye	ALT + 8
Turn all lights off	ALT + 9
Apply more brightness	SHIFT + +]
Apply less brightness	SHIFT + - [
Restore original brightness	HOME
Toggle specular lights	ALT + S

Scene Components Panel Shortcuts

User Interface Function	Keyboard Shortcut
Open the *Object Properties* dialog for selected object	Select object + `ALT` + `ENTER`
Toggle the visibility of the selected object	`H`
Collapse Scene Tree	`SHIFT` + `C`

Selection Shortcuts

User Interface Function	Keyboard Shortcut
Select up the Scene Tree and close all sub-objects of the selected object	`ALT` + click object in Viewport
Select multiple objects	`CTRL` + click objects in Scene Tree `CTRL` + click objects in Viewport
Open *Select Objects* dialog	`F3`

Smoothing Menu Shortcuts

User Interface Function	Keyboard Shortcut
Toggle smoothing	`CTRL` + `SHIFT` + `S`

Steps Shortcuts

User Interface Function	Keyboard Shortcut
Play all Steps	`SHIFT` + `SPACE`
Play the selected Step	`SPACE`
Play next Step	`PAGE DOWN`
Play previous Step	`PAGE UP`
Select next Step	`DOWN ARROW`
Select previous Step	`UP ARROW`

3 Working with SAP 3D Visual Enterprise Viewer

Use

The user interface with its viewport, information panel, and toolbars constitute your platform for working with SAP 3D Visual Enterprise Viewer. With the many and varied functions available to you over the icons and menus of these component parts, you can perform a wide range of activities. You can use these functions to supplement your business activities.

This section provides you with some general introductory functional information, which is designed to assist you with your activities. More detailed functional information is provided in other sections.

Features

When you choose to display a 2D image or 3D scene:

- It is automatically displayed in the viewport. This is the initial display of your scene.
- All the objects, parts, model views, as well as steps and procedures associated with the chosen scene are downloaded and the information panel populated with the appropriate information. This means that all scene-related information concerning all objects, parts, layers, metadata, model views steps, and associated collaboration comments is distributed over the *Scene Tree*, *Parts*, *Layers*, *Model Views*, *Steps*, and *Collaboration* windows.
- If the file is password protected, you will be asked for the password prior to opening the file.

The information panel is usually the starting point for any functional activities involving changes to the structure of the scene, for example, the selection and visibility of objects, as well as the display of model views, and animated steps or procedures. Many other functions including measurement, animation, and different display modes are available using the toolbars.

In addition to the functions that are available in the other component parts of the user interface, a wide variety of functions relating to modifications of the scene display are also available directly in the viewport. As a considerable time-saving factor, the mouse buttons have many various functions. For example, you can double-click directly on the image displayed to zoom in.

If the *Orbit* icon has already been selected in the *2D/3D Editor* toolbar, the mouse button functions are as follows:

Mouse Button	Functional Description
Left and held depressed	Used to rotate the selected scene
Left and right held depressed	Used to pan the selected scene
Middle wheel held depressed	Used to pan the selected scene

Mouse Button	Functional Description
Right and held depressed	Used to zoom the selected scene
Middle wheel scrolled	Used to zoom the selected scene

If the *Orbit* icon has been chosen and you hold both the SHIFT key as well as the left mouse button depressed, you can rotate the scene in the vertical plane when you move the mouse to the left or right. This is useful when you want, for example, to return the scene to a horizontal position.

If the *Pan* icon has already been selected in the *2D/3D Editor* toolbar, the mouse button functions are as follows:

Mouse Button	Functional Description
Left and held depressed	Used to pan the selected scene
Left and right held depressed	Used to pan the selected scene
Middle wheel held depressed	Used to pan the selected scene
Right and held depressed	Used to zoom the selected scene
Middle wheel scrolled	Used to zoom the selected scene

Many functions result in a changed display of your initially chosen scene. To return to the initial display of your scene, you can either choose *Home* in the *2D/3D Editor* toolbar, or you can right-click the viewport and then choose Home in the context menu.

> **i** Note
>
> The *Home* function only works when you have panned, zoomed, or rotated a scene. If you have played the animation or the steps from the information panel, you must select the scene in the selection table and then download it again to see the initial display.

3.1 Displaying Objects, Model Views, Steps, and Sequences

The 3D scenes published internally within your enterprise contain models consisting of various objects. Using the viewer functions, you can decide which model objects you want to display in your scene. Depending on your specific activities, this can range from a single object up to all model objects. You can also determine the way in which objects are displayed, or if they are highlighted in your scene.

Many of the available 3D scenes also provide associated model views and portfolios, animated steps, and even procedures containing several steps. In such cases, you can select and activate the model views and steps or procedures of your choice.

Sequences, whether they are part of a step or an animated scene, can be individually selected and activated.

3.1.1 Selection, Visibility, and Highlighting of Objects

Use

Using combinations of the selection and visibility functions, you can determine which objects are displayed in a scene, and how they are displayed. You can therefore display a single object, a number of objects, a group or groups of objects, or all objects. This enables you, for example, to display a single object of a scene and examine it more closely, or to display the specific objects of a scene that are essential for your discussions.

Objects are visible in the scene when their associated checkbox is selected in the scene tree. Selecting a visible object will highlight it in red and display its bounding box (the bounding box visibility is an option in the *Settings* dialog box. It is not on by default). Selecting a hidden object, which you can do from the scene tree 3D objects list, will only display the object's bounding box. Selecting a complete group of objects displays a single bounding box for the group.

Activities

Selection of Objects

You can perform your object selections in one of the following ways:

- Click one or more objects in the 3D objects list. You can select both individual objects and groups of objects. To make your object selection, you can use the `SHIFT` and `CTRL` keys.
- Click one or more objects directly in the scene itself. To make more object selections, you must use the `CTRL` key.
- Right-click anywhere in the 3D objects list, and choose *Select All* from the context menu.
- Right-click anywhere in the viewport, and choose *Select All* from the context menu.

> **i Note**
>
> When you select one or more individual objects, which are marked as visible, these are shown highlighted and in bounding boxes in the scene. However, when you select a complete group of objects in the 3D object list, and not the individual objects themselves, the group of objects is shown in a single bounding box.

Deselection of Objects

You can deselect the objects in your selection in the following ways:

- Left-click another item in the 3D object list.
- Left-click anywhere in the viewport, except on the selected object.

Selection of Object Visibility

You can make your object visibility selections in the following ways:

- Select the checkboxes of the required objects in the 3D object list.
- Right-click your selected objects in the 3D object list and choose *Show Selection* in the context menu.
- Right-click anywhere in the viewport or 3D object list, and choose *Show All Objects* in the context menu.

Deselection of Object Visibility

To deselect your object visibility selections, right-click anywhere in the 3D object list and choose *Hide All Objects* in the context menu.

Selection of Highlighted Objects

You can highlight objects in the scene in the following ways:

- Click individual objects in the 3D object list. You can also click complete groups of objects, but then only one bounding box is shown for each group.
- Click one or more objects directly in the scene itself. To make several object selections, you must use the CTRL key.
- Right-click in the viewport, and choose *Select All* in the context menu to highlight all objects of the scene.
- Click the individual objects in the *Parts* window. To make several object selections, you can use the CTRL or SHIFT key, or right-click and choose *Select All*.

Deselection of Highlighted Objects

You can deselect all the highlighted objects in your scene by clicking an empty area in the viewport, scene tree, or parts pane.

You can deselect the current selection in your scene in the following ways:

- Left-click any unselected object in the 3D object list.
- Left-click any unselected object in the parts list.

3.1.2 Viewing the Properties of a Scene or Object

Use

You can view a number of properties for 3D scenes. These include the units of measurement used within the scene, and also associated scene metadata.

Tab	Functional Description
Environment	The global display settings including the scene's environment attributes and the unit measurement
Summary	A summary of the information relating to the scene's appearance including the number of vertices and faces, any texture coordinates, and any animation values. This information is automatically updated when you modify the properties of the scene.
Metadata	The metadata that is associated with the scene in its entirety. Metadata only displays when at least one of the objects has metadata. These columns of information are added to the BOM in SAP 3D Visual Enterprise Author.

You can also view a number of properties for individual objects within a 3D scene. The information in the *Object Properties* window is as follows:

Tab	Functional Description
Summary	Contains a summary of the information relating to the object's appearance, including the number of vertices and faces, any texture coordinates, and any animation values. The information is automatically updated when you modify any properties relating to the scene.
Information	Displays detailed information relating to the object's appearance, including the number of vertices and faces, any texture coordinates, the parent object name (if any), and any animation values. The information automatically updates when you modify the properties of either the object or any associated material.
Transformation	Displays the metadata that is associated with the object. Metadata only displays when the object has metadata. These columns of information are added to the BOM in SAP 3D Visual Enterprise Author.
Materials	Displays the selected object's geometry and transformation information, including the transform values (position, rotation, scale, and shear) of the selected objects along the axes. These values display encoded in a matrix and are relative to the world coordinate system by default. An object's 'extents' are its maximum dimensions in X, Y, and Z. These are the dimensions of the rectangular bounding box that surrounds the object in local object coordinate system.
Metadata	Displays the numbers, names, textures, and faces of the materials assigned to the selected object.
Identifiers	Displays identifiers associated with the selected object in table format. Identifiers have the following identifier properties: • *Source* - Indicates the origin of the identifier. • *Type* - Indicates the nature of the geometry the identifier originated from. • *Identifier* - Displays a concatenation of identifier components. Clicking the expand icon displays the identifier components as name-value pairs. The table will be blank if no identifiers are associated with the selected object.

Features

Viewing the Scene Properties

You can open the *Scene Properties* dialog box in one of the following ways:

- Double-click the 3D Objects node in the 3D objects list.
- With nothing selected in the viewport, you can use the ALT and ENTER keys.
- Right-click anywhere in the 3D objects list, and choose *Scene Properties* from the context menu.
- Right-click anywhere in the viewport with nothing selected, and choose *Scene Properties* from the context menu.

Viewing the Properties of an Individual Object

You can open the *Object Properties* dialog box in one of the following ways:

- Right-click an object or part in the 3D objects list and choose *Object Properties* from the context menu.
- Right-click an object or part in the viewport and choose *Object Properties* from the context menu.

3.1.3 Selection of Objects using the Search Function

Use

Objects must be selected before their properties can be viewed. Individual and grouped objects (both selected and unselected) can be highlighted or made transparent. This isolates the objects to make it easier to distinguish them from others.

Multiple objects can be selected by name, or metadata using the *Select Objects* dialog box. This comprises selection tools used to select objects automatically and a list that displays all the objects of the current scene. This list can be used to manually select objects. In addition, the *Query* tab in the *Select Objects* dialog box is used to run queries to select objects in the scene. This functionality is described separately.

Features

The following *Select Objects* functions are available for your use:

Option	Functional Description
Name	Used to select objects by name: *Search For*: Selects objects using the letters contained in their names *Include Metadata*: Selects objects and includes any associated metadata *Case-Sensitive*: Selects objects by name using upper and lowercase characters *Filter*: Used to filter the display of objects in the dialog *All Objects*: Displays all objects *Current Selection*: Displays all objects that have been previously selected *Visible Objects*: Displays all objects that are visible *Select*: Selects the objects
Size	Used to select objects by their size within their bounding box: *Bounding Box Diagonal*: Selects objects by size from smallest to largest *Invert Selection*: Inverts the current selection *Select*: Selects the objects
Metadata	Used to select objects by metadata: *Category*: Selects objects using a metadata category *Key name*: Selects objects by their metadata key properties. *Key Value*: Selects objects by a value in the metadata key properties *Select*: Selects the objects
Query	Used to run queries to select objects in the scene

Activities

Right-click the viewport, choose *Search* from the context menu, and then make your selections.

3.1.4 Selection of Objects using Query

You can search for multiple objects by using the query function. Once the objects are matched or filtered, you can then perform a single action or multiple actions on the matched objects. For example, you can change the material on all the matched objects and set a specific layer. You can apply these actions to the matched objects, and their children in the BOM, or alternatively, only to the matched objects. Query functionality works with models of all sizes, but can be particularly useful when navigating extremely large models.

Queries can be loaded into the *Query* window from a text (`.rhq`) file. They are executed from the *Query* window, and the results displayed in the SAP 3D Visual Enterprise Viewer viewport. Queries may be created and edited using the query function, which is available as a tab in the *Select Objects* dialog box. From here, they may be saved as `.rhq` files.

When you create a query, you create a set of statements. These statements contain filters and action sets. Each statement has one or more filters that are tested against the objects in the Bill of Materials (BOM) or node hierarchy. It also has one or more actions that are taken on the objects that match the filters in the statement. A filter may match all of the objects in the BOM or a subset of those objects. A list of objects is found using the query filter(s), and then the actions are applied to those objects located.

Multiple statements can be read from each file. The query statements are run in the order in which they appear, and the results from one statement may be used directly or indirectly in the next statement. The actions include, but are not limited to, hide or show objects, suppress or resume objects, change material, and set layer. These actions apply to the matched objects, and their children in the BOM. Optionally, the actions may be restricted to apply to only the matched objects and not to their children unless they also are also matched with the same filters.

Query Evaluation

Each node in the BOM is evaluated using the filters based on metadata (attributes of nodes or their parents) values and node specific values (for example, the polygon_count). The filter part of the statement can include tests on node values, tests on metadata for a node, or for the parents of a node, and tests on other states like whether the node is hidden or showing in the viewport.

When a query is run, the evaluation proceeds in the following manner:

1. If there is an initial scene setup, this is performed.
2. Each statement is processed in order.
    - Each filter is tested against every object in the scene, respecting and/or/not logic if any for filters.
    - Actions are performed on all objects that match the filters for the statement.

3.1.4.1 Creating a Query

Use

There are a number of steps involved in creating a query, which can be summarized as follows:

1. By default, a new query always contains a statement. Initially, give the statement a name.
2. To this statement, add the required filters, to select specific objects.
3. Add the appropriate actions to perform on the selected objects.

> **i** Note
>
> You can create filters and test without any actions. This is a good way to try things out as you develop the statements.

4. Run the query.

Activities

To add a query:

1. Do one of the following:
   - Click *Select Objects* on the *Scene* panel, and navigate to the *Query* tab.
   - Press F3 on your keyboard, and navigate to the *Query* tab.
2. Choose *New Query*.
3. Select your initial scene setup and enter the details for the first statement if required, by double-clicking the statement name.
4. Add the required filters to the statement.
5. Add the required actions to the statement.
6. Click *Run Query* to run the query. In the top right hand corner of the statement, information is provided about the number of objects selected from the total number of objects present, and the number of actions performed.

3.1.4.1.1 Step 1: Statements

Use

The first step in creating a query is to create a statement. The statement contains all the selection criteria for the query. Initially, the default statement is highlighted by a red boundary line. This indicates that the statement is incomplete. The boundary line disappears once the statement is completed.

Activities

Creating a Statement

1. Click *Select Objects* on the *Scene* panel or press F3 on your keyboard, and navigate to the *Query* tab page
2. Choose the *New Query* icon, or if you are opening an existing query, choose the *Open Query File* icon, and select the query to open.
3. Select your initial scene setup, and enter the details for the first statement if required.
4. If you wish to add an additional statement, choose *Add Statement* and make selections as required.

Renaming a Statement

Double-click the statement name, and enter a new name for the statement. When you are finished, click outside the statement text box to save the new name.

3.1.4.1.2 Step 2: Adding Filters to Statements

Use

You can add a number of different types of filters to your query. They are:

- Object filters
- Metadata/VE ID filters
- Spatial filters
- Number is in range filters

When you use a filter, you must define all phrases or words in order to complete the filter expression. For example, in the name filter option 'name is equal', the name must be supplied.

SAP 3D Visual Enterprise Author runs each filter when it is specified, to assist in configuring the correct filter for the query. A tooltip displays, indicating the number of objects that match the specified filter.

When adding filters to statements, you can also use regular expressions. Regular expressions are also referred to as regex or regexp, and provide a means for matching strings of text, such as particular characters, words, or patterns of characters.

Activities

1. Enter the statement details and choose *Filter*.
2. Make your filter selections as required. You can select one or many, from the following options: object, metadata, spatial, or number is in range filters.
3. Perform one of the following:
   - Choose the *Add Filter* icon to add another filter.
   - Go to Step 3: Adding Actions.

3.1.4.1.2.1 Object Filters

You can use the object filter options to select objects based upon differing criteria. You can select one or many, from the following options. Descriptions of each option are detailed in the table below.

Filter	Condition	Description
All Objects		All objects match this filter. This is commonly used for hiding or showing or unselecting all objects.
Name		All objects that contain the text entered, match this filter. This filter is used in conjunction with the following conditions:
	Is equal	The name of an object matches exactly the text specified.
	Is not equal	The opposite of 'is'. Allows the filter to specify everything other than the text specified.
	Is Equal to Any	The name of an object matches any of the specified sub-strings that are delimited by a space or quotation marks **i Note** The condition “is equal to any” is intended to assist when query is used on array data. For example, if a node has an array metadata field with values a,b,c,d,e and the query specifies “is equal to any” passing 3 values c,h,p, then the expression will evaluate to true becasue both arrays contain c. The same query would evaluate to true for a node that contained a,p but would be false for a nodes with k,j,z
	Is not Equal to Any	Allows the filter to specify names other than the sub-strings specified
	includes	Matches all objects that have the specified text included in them

Filter	Condition	Description
	does not include	Matches all objects that do not specified text included in them
	starts with	Matches all the objects with a name starting with the specified text
	does not start with	Matches all the objects with a name that does not start with the specified text
	ends with	Matches all the objects with a name ending with the specified text
	does not end with	Matches all the objects with a name that does not end with the specified text
	not case sensitive	Case is not considered when assessing searching criteria. **i Note** This condition applies to all of the above name filters.
	case sensitive	Case is considered when assessing searching criteria. **i Note** This condition applies to all of the above name filters.
	matches regexp	The field must match exactly the specified regular expression to be matched.
	does not match regexp	
	includes regexp	Selects all objects that include text matching the specified regular expression
	does not include regexp	
ID		Used to set filters relating to Asset and Instance IDs

Filter	Condition	Description
Asset ID		All objects that contain the SAP 3D Visual Enterprise Generator allocated Asset ID entered, match this filter. This is used in conjunction with the following conditions:
	Is equal	The name of an object matches exactly the text specified.
	Is not equal	The opposite of 'is'. Allows the filter to specify everything other than the text specified.
	Is Equal to Any	Asset or Instance IDs match any of the specified sub-strings that are delimited by a space or quotation marks **i Note** The condition “is equal to any” is intended to assist when query is used on array data. For example, if a node has an array metadata field with values a,b,c,d,e and the query specifies “is equal to any” passing 3 values c,h,p, then the expression will evaluate to true becasue both arrays contain c. The same query would evaluate to true for a node that contained a,p but would be false for a nodes with k,j,z
	Is not Equal to Any	Allows the filter to specify IDs other than the sub-strings specified
	includes	Matches all objects that have the specified text included in them
	does not include	Matches all objects that do not specified text included in them
	starts with	Matches all the objects with a name starting with the specified text
	does not start with	Matches all the objects with a name that does not start with the specified text

Filter	Condition	Description
	ends with	Matches all the objects with a name ending with the specified text
	does not end with	Matches all the objects with a name that does not end with the specified text
	not case sensitive	Case is not considered when assessing searching criteria. **i Note** This condition applies to all of the above name filters.
	case sensitive	Case is considered when assessing searching criteria. **i Note** This condition applies to all of the above name filters.
	matches regexp	The field must match exactly the specified regular expression to be matched.
	does not match regexp	
	includes regexp	Selects all objects that include text matching the specified regular expression
	does not include regexp	
Instance ID		All objects that contain the SAP 3D Visual Enterprise Generator allocated Instance ID entered, match this filter. This is used in conjunction with the following conditions:
	Is equal	The name of an object matches exactly the text specified.
	Is not equal	The opposite of 'is'. Allows the filter to specify everything other than the text specified.

Filter	Condition	Description
	Is Equal to Any	Asset or Instance IDs match any of the specified sub-strings that are delimited by a space or quotation marks **i Note** The condition "is equal to any" is intended to assist when query is used on array data. For example, if a node has an array metadata field with values a,b,c,d,e and the query specifies "is equal to any" passing 3 values c,h,p, then the expression will evaluate to true becasue both arrays contain c. The same query would evaluate to true for a node that contained a,p but would be false for a nodes with k,j,z
	Is not Equal to Any	Allows the filter to specify IDs other than the sub-strings specified
	includes	Matches all objects that have the specified text included in them
	does not include	Matches all objects that do not specified text included in them
	starts with	Matches all the objects with a name starting with the specified text
	does not start with	Matches all the objects with a name that does not start with the specified text
	ends with	Matches all the objects with a name ending with the specified text
	does not end with	Matches all the objects with a name that does not end with the specified text

Filter	Condition	Description
	not case sensitive	Case is not considered when assessing searching criteria. **i Note** This condition applies to all of the above name filters.
	case sensitive	Case is considered when assessing searching criteria. **i Note** This condition applies to all of the above name filters.
	matches regexp	The field must match exactly the specified regular expression to be matched.
	does not match regexp	
	includes regexp	Selects all objects that include text matching the specified regular expression
	does not include regexp	
Properties		Provides filters relating to object properties; for example, 'selected', 'visible'. Note that all filter property options can be negated; for example, the highlighted filter can be set to 'Highlighted' or 'Not Highlighted'.
Selected		All selected objects match this filter. This is commonly used for hiding or showing or unselecting all selected objects.
Visible		All objects that are visible match this filter. This is commonly used for hiding or showing or unselecting all visible objects.
Highlighted		Only highlighted or non highlighted objects match this filter.

Filter	Condition	Description
Suppressed		Either 'Suppressed' or 'Not Suppressed' objects match this filter. If a node is 'suppressed', the node and its children do not exist in the scene, and are not visible in the viewport or the scene BOM. The suppressed node and its children will be loaded into the scene once the suppressed node is 'resumed' at a later time. Filters cannot process the children of a suppressed node, and only run for the suppressed node itself. Filters can process suppressed nodes so that it is possible to find such nodes with a query, and resume them.
Group		Either 'Group' or 'Not Group' objects match this filter. Groups do not have a mesh object, or drawable geometry
Matched Previous Statement		Matches objects matched in the previous statement unless negated
Mark		All objects that are set to either *Marked* or *Not Marked* match this filter. The idea of marking an object is like selecting it, but silently. The mark on the object is maintained, so that you can test for it later. The marks are not saved with the file. They are active only during the current session
Mark2		All objects that are set to *Mark2* match this filter
Mark3		All objects that are set to *Mark3* match this filter
Mark4		All objects that are set to *Mark4* match this filter
Mark5		All objects that are set to *Mark5* match this filter
Mark6		All objects that are set to *Mark6* match this filter

Filter	Condition	Description
Number of		
Children		All objects that contain the specified number of child nodes, match this filter. This is used in conjunction with the following conditions:
Polygons		All objects that contain the specified number of polygons, match this filter. This is used in conjunction with the following conditions:
Vertices		All objects that contain the specified number of vertices, match this filter. This is used in conjunction with the following conditions:
	equal to	The number matches exactly the number specified
	less than	Matches all objects that have a count less than the specified number.
	greater than	Matches all objects that have a count greater than the specified number
	in the range	Used to check a variable's value as being between two values. The test is for the inclusive range.
	greater than or equal to	Matches all objects that have a count greater than or equal to the specified number
	less than or equal to	Matches all objects that have a count less than or equal to the specified number
Size		
Bounding box width		All objects with the specified bounding box width match this filter. This is used in conjunction with the following conditions.
Bounding box height		All objects with the specified bounding box height match this filter. This is used in conjunction with the following conditions.

Filter	Condition	Description
Bounding box depth		All objects with the specified bounding box depth match this filter. This is used in conjunction with the following conditions.
Bounding box diagonal		All objects with the specified bounding box diagonal size match this filter. This is used in conjunction with the following conditions.
Bounding box volume		All objects with the specified bounding box volume match this filter. This is used in conjunction with the following conditions:
	equal to	The number matches exactly the number specified
	less than	Matches all objects that have a measurement less than the specified number
	greater than	Matches all objects that have a measurement greater than the specified number
	in the range	Used to check a variable's value as being between two values. The test is for the inclusive range.
	greater than or equal to	Matches all objects that have a measurement greater than or equal to the specified number
	less than or equal to	Matches all objects that have a measurement less than or equal to the specified number
Other		
Level of hierarchy		All objects at the specified level of hierarchy match this filter. This is commonly used for hiding or showing or unselecting certain objects. This is used in conjunction with the following conditions.

Filter	Condition	Description
Opacity		All objects with the specified level of opacity match this filter. This is used in conjunction with the following conditions:
	equal to	The number matches exactly the number specified.
	less than	Matches all objects that have a count less than the specified number
	greater than	Matches all objects that have a count greater than the specified number
	in the range	Used to check a variable's value as being between two values. The test is for the inclusive range.
	greater than or equal to	Matches all objects that have a count greater than or equal to the specified number
	less than or equal to	Matches all objects that have a count less than or equal to the specified number
Using Material		Opens the *Select Material* dialog box, and is used to specify a specific object material.
Is included in layer		Opens the *Select Layer* dialog box, and is used to specify a specific layer in which the object or objects exist.
Included in XML List		Opens the *Select XML List* dialog box, and is used to specify parts that are included in a previously saved XML list.

If you select the *Using Material* option, the following further filter selections can be made when you choose  to display the *Select Material* window:

Filter	Functional Description
Material Name	The name of the material
Get from Scene	Selects a material from the scene

If you select the *Included in Layer* option, the following further filter selections can be made when you choose  to display the *Select Layer* window:

Filter	Functional Description
Layer Name	The name of the layer
Get from Scene	Selects a layer from the scene

If you select the *Included in XML List* option, the following further filter selections can be made in the *Select XML List* window:

Filter	Functional Description
Look In	The location of the file
File Name	The name of the XML file
Files of Type	The type of file; for example, XML list.

3.1.4.1.2.2 Metadata Filters

You can use the metadata filter options to select objects by the metadata contained within. Values in metadata expressions allow you to type in a number or string, or select from among the existing values.

You can select one or many, from the following options. The conditions that display depend on the type selected in the *Metadata VE/ID* window. For example, the available conditions for a numeric type are different to those of a text type, and if *Any Field* is selected, the available conditions are the same as those of a text type. Descriptions of each option are detailed in the table below:

Filter	Condition	Description
[*Metadata VE/ID* window]		Opens the *Metadata VE/ID* window, and is used to select metadata attributes to include in the query filters. Metadata filtering is used in conjunction with the conditions below.
[Available conditions for text type or *Any Field*]		
	equal	The name of an object matches exactly the text specified.

Filter	Condition	Description
	is equal to any	The metadata key/VEID value matches any of the specified sub-strings that are delimited by a space or quotation marks
	is not equal to any	Allows the filter to specify metadata key/VEID values other than the sub-strings specified
	includes	Matches all objects that have the specified text included in them
	starting with	Matches all the objects with a name starting with the specified text
	ending with	Matches all the objects with a name ending with the specified text
	not case sensitive	Case is not considered when assessing searching criteria. **i Note** This condition applies to all of the above name filters.
	case sensitive	Case is considered when assessing searching criteria. **i Note** This condition applies to all of the above name filters.
	matching regexp	The field must match exactly the specified regular expression to be matched.
	including regexp	Matches all objects that include text matching the specified regular expression
	specified	Matches when the field itself has an actual value
[Available conditions for numeric metadata]		
	equal to	The number matches exactly the number specified.

Filter	Condition	Description
	less than	Matches all objects that have a count less than the specified number
	greater than	Matches all objects that have a count greater than the specified number
	in the range	Used to check a variable's value as being between two values. The test is for the inclusive range.
	greater than or equal to	Matches all objects that have a count greater than or equal to the specified number
	less than or equal to	Matches all objects that have a count less than or equal to the specified number
	specified	Matches when the field itself has an actual value

The following filter selections can be made in the *Metadata VE/ID* window:

Checkboxes and Fields	Functional Description
Find (Key)	Used to search for metadata names matching characters. The search function finds those items in the list having the characters as a sub-string; for example, where *Weight* is a sub-string in several attributes.
Refresh	Refreshes the list. **i Note** If you delete or create objects in the scene, the *Metadata VE/ID* window indicates that the page requires refreshing by displaying the message *Click Refresh to update metadata table*.
Category	The metadata category
Key	The name of the metadata field

Checkboxes and Fields	Functional Description
Type	The type of variable, for example, text or boolean. **i Note** If you delete or create objects in the scene, the *Metadata VE/ID* window indicates that the page requires refreshing by displaying the message *Click Refresh to update metadata table*.
Total	The total number of objects with this metadata field
Unique	The number of unique values present in the loaded model
Unique Values	A sample of the values associated with the variable
Show Selected Fields Only	Displays at the bottom left of the *Metadata VE/ID* window, and is used to select the attributes that you see. To see all the metadata variables in the loaded model, this field needs to be unchecked.

3.1.4.1.2.3 Spatial Filters

You can use the spatial filter options to perform advanced search and selection of objects based upon user defined areas and/or locations. You can select one or many, from the following options. Descriptions of each option are detailed in the table below:

Filter	Condition	Description
Not in the Region		Used to match objects that are not matching the spatial condition specified. This option effectively adds 'Not' to a filter.
Type		Used to specify the type of spatial query.
Selected Objects		Used to specify objects that can match each by their bounding box, or combine to form a single bounding box. Selecting this option makes available the further filtering options 'Regions' 'Grow Region' and 'Crossing'.

Filter	Condition	Description
Regions		Specifies the number of regions, and is used to set the way in which the regions are matched. This is used in conjunction with the following conditions:
	Combined	Used to test all of the bounding boxes of matched objects by merging them together into the minimum box that totally encloses all the boxes. That merged box is tested against the objects during statement evaluation.
	Separate	Used to individually test one or more bounding boxes of matched objects. If any test succeeds, the whole test is positive.
Grow Region		Used to specify a size for a bounding box in the scene. You can select an exact size, or choose to grow the box to a specified size. This is used in conjunction with the following conditions:
	No	Uses the box as defined.
	Scene Units	Used to grow the box by a specified number of units.
	Percentage	Used to grow the box to a specified percentage of the diagonal size.
Crossing		Used to set the match to occur for objects that touch or cross through the specified box, or parts that are wholly contained in the box. The available options are either Yes (check for crossing), or No (ignore crossing).
Bounding Box		Used to specify the x, y, and z, min and max values for a box in the scene, or you can "Get from selected object(s)" if any objects are selected in the scene. You can modify the six values to change the dimensions of the box for your query. Selecting this option also makes available the further filtering options 'Grow Region' and 'Crossing' (described above).

Filter	Condition	Description
Get box from selected objects		Gets the selected objects if any objects are selected in the scene. The six values are automatically updated for your query. This is used in conjunction with following conditions:
	X Min Max	Used to specify the x min and max values for a box in the scene.
	Y Min Max	Used to specify the y min and max values for a box in the scene.
	Z Min Max	Used to specify the z min and max values for a box in the scene.
Contour		Used to match the triangles of selected objects against other objects in the scene, effectively asking whether two objects touch. A tolerance can be added to specify that two objects must be within a specified number of scene units of one another. Selecting this option also makes the further filtering option 'Grow Region' (described above) available.

3.1.4.1.2.4 Number is in Range Filters

You can use the number is in range filter option to select objects within a range. You can select the following option in the *Metadata* dialog:

Condition	Description
in the range	Used to check a variable's value as being between two values. The test is for the inclusive range.

3.1.4.1.2.5 Using Operators to Combine Filters

Use

You can use operators between your filters to allow combinations of filter expressions. The default option is to combine multiple expressions with *AND*. In this case, each filter in the statement is required to test true for the

filter to be seen as matching at a given node. If you change this to *OR*, at least one filter in the statement is required to test true for the filter to be seen as matching a given node.

Activities

Combining Filters for a Query

Make your filter selections as required and perform one of the following:

- Click *AND* to combine the filters. If using *AND* and a filter returns *False*, the next filter is not evaluated. Therefore, it is recommended to write the fastest or easiest filter first.
- Click *OR* to combine the filters with at least one filter in the statement required to test true in the query. If you use *OR* to combine multiple filters, it is recommended to first write the fastest or easiest filter. If the first filter returns *True,* subsequent operators with are not evaluated

3.1.4.1.2.6 Regular Expressions

Regular expressions are also referred to as **regex** or **regexp**, and provide a concise and flexible means for matching strings of text, such as particular characters, words, or patterns of characters. The following examples illustrate a few specifications that could be expressed in a regular expression:

- The sequence of characters 'car' in any context, such as 'car', 'cartoon', or 'bicarbonate
- The word 'car' when it appears as an isolated word
- The word 'car' when preceded by the word 'blue' or 'red
- A dollar sign immediately followed by one or more digits, and then optionally a period and exactly two more digits (for example '$10', or '$245.99')

> **i** Note
>
> To make a pattern case insensitive, start with the string '(?i)'.

You can use Regular Expressions (Regexps) to perform complicated text queries. The following are examples of regular expressions:

Regular Expression	Functional Description
[\d]	Match 1, 2, 3, 4, ... \d represents a single digit
\[[1-3]\]	Match [1], or [2], or [3]
[1-3]	Represents a single digit between 1 and 3, inclusive
\[and \]	Escaped characters so they represent [and] themselves rather than the class, as in the example [1-3] above

Regular Expression	Functional Description
^0	Match 0asdfsdfs BUT NOT dfsdfgfsdfg0
^	Anchors the pattern at the beginning of the string for a single 0 character

Regular Expressions are built up from expressions, quantifiers, and assertions. The simplest form of an expression is simply a character; for example, 'x' or '5'. An expression can also be a set of characters. For example, the expression '[ABCD]', will match an 'A' or a 'B' or a 'C' or a 'D'. As shorthand, this could be written as '[A-D]'. If you wish to match any of the capital letters in the English alphabet, it can be written as '[A-Z]'. A quantifier informs the regexp engine of the number of occurrences of the expression that are required; for example, 'x{1,2}' - match an 'x' which occurs at least once, and at most twice.

Example

A regexp that matches a string containing integers in the range 0 to 99.

1. Start with [0-9]{1} which means match a digit exactly once. This regexp alone will match integers in the range 0 to 9.
2. To match one or two digits, increase the maximum number of occurrences so the regexp becomes [0-9]{1,2} meaning match a digit at least once and at most twice. However, this regexp as it stands will not match correctly. This regexp will match one or two digits within a string.
3. To ensure that a match against the whole string you must use the anchor assertions. Use a **^** (caret) which when it is the first character in the regexp means that the regexp must match from the beginning of the string. You also need **$** (dollar) which when it is the last character in the regexp means that the regexp must match until the end of the string. So now our regexp is ^[0-9]{1,2}$. Note that assertions, such as ^ and $, do not match any characters.

> **i** Note
>
> If you have seen regexps elsewhere, they may have looked different from the ones above. This is because some sets of characters and some quantifiers are so common that they have special symbols to represent them. [0-9] can be replaced with the symbol \d. The quantifier to match exactly one occurrence, {1,1}, can be replaced with the expression itself. This means that x{1,1} is exactly the same as x alone. A 0 to 99 matcher could be written ^\d{1,2}$. Another way of writing it would be ^\d\d{0,1}$, that is, from the start of the string match a digit followed by zero or one digits. In practice, most people would write it ^\d\d?$. The ? is a shorthand for the quantifier {0,1}, i.e. a minimum of no occurrences a maximum of one occurrence. This is used to make an expression optional. The regexp ^\d\d?$ means "from the beginning of the string match one digit followed by zero or one digits and then the end of the string".

Examples of Regular Expressions and Exprected Results

Pattern	Exprected Results
rhd	Matches strings containing "rhd"
^rhd	Matches strings starting with "rhd", like "rhd is the beginning of this string"
\d\d\d\d	Matches strings containing a series of 4 digits, like "1234" but not "x34x33x"
^\d\d\d\D	Matches strings starting with a series of 3 digits and a non-digit, like "123xaa" or "133fdffd"
abc$	Matches strings which end with ‘c’, like "ironic" but not "interim"
interim|ideal	Matches strings which contain either "interim" or "ideal"
gr[ea]y	Using brackets allows matching against a list of characters so this matches "grey" or "gray"
stringer[1-3]	Using brackets allows matching against a range of characters so this matches "stringer1", "stringer2", or "stringer3"
[xX]	Allows matches against both lower and uppercase X, like "box" or "Xavier"
RR[x1-3abc]	With this bracketed pattern, matches will contain the string "RR" followed by one of several characters: x, 1, 2, 3, a, b, or c
\^\$	Escaping a metacharacter with the backslash, matches the metacharacter itself so "xxx^$xxxx" would match
\[\d\]	Escaped square brackets, match a single digit within square brackets including: "[1]", "[6]", "[[9]]"
P[^V]T	Matches a three character string, but the second character is anything but a ‘V’. "PxT", "P2T", and "PTT" all match.
P.T	This expression uses the wildcard dot. It will match any single character between the ‘P’ and ‘T’, so valid matches include "PVT", "P@T", "P$T".
P.*T	Uses the star to modify the wildcard dot. Now the pattern will match any number of characters between a ‘P’ and ‘T’, so valid matches include "PVT", "PT", and"PxxxxxxxxxT".

Pattern	Exprected Results
(dog)	Grouping allows applying the other metacharacters to a pattern, rather than just a single character. Without a modifying metacharacter, the round brackets are ignored, so strings containing "dog" will match.
11(34)?22	Grouping in combination with the question mark, makes the contents of the group optional. In this case, valid matches include "1122" and "113422".
1+xx	The use of the plus sign matches one or more of the preceding character. In this case, "1xx" and "111111xx" are valid matches.
1(xy)+	The plus sign may be used on a group like (xy) here. In this case, "1xy", "4xyxyxyxyxy", and "3xyxy" will all match.

3.1.4.1.3 Step 3: Adding Actions

Use

You can use the action options to select the types of actions to be performed once matching objects have been matched in the query. Actions are the functions that are applied to objects that match when filters are evaluated. Actions operate on an object and its children by default. This is called recursive. For all actions added to a statement, you can choose to restrict those actions to the specific object passing the filter. You cannot mix recursive and non-recursive actions.

There are a number of different types of actions that can be added to a query. They are as follows:

Action	Description
Select Objects	Selects all objects
Deselect Objects	Deselects all objects
Show Objects	All objects are made visible
Hide Objects	All objects are hidden or invisible
Suppress Objects	Objects are suppressed
Resume Objects	Suppressed objects are released. This action reverses their suppression so that they are candidates for filters in queries.
Suppress Procedures	Procedures are suppressed

Action	Description
Delete Procedures	Procedures are deleted
Resume Procedures	Suppressed procedures are released. This action reverses their suppression so that they are candidates for filters in queries.
Flag	Sets or clears *Marked* flags on objects, so there are a number of marks that can be tested with filters.
Appearance	Selects appearance actions to perform. These include assigning opacity, render mode, and materials to objects, and also highlighting objects.
Miscellaneous	Selects miscellaneous actions to perform on selected objects.

Activities

Adding Actions to a Query

1. Enter the statement details, make your filter selections as required, and choose the *Add Action* icon.
2. Make your action selections as required. You can select one or many, from the following options:
   - Object actions
   - Appearance actions
   - Miscellaneous actions
3. Perform one of the following:
   - Choose the *Add Action* icon to add another action.
   - Go to Step 4: Running a Query.

3.1.4.1.3.1 Object Actions

You can use the object action options to perform general actions on objects. You can select one or many object actions, from the following options. Descriptions of each option are detailed in the table below:

Action	Condition	Description
Select Objects		Objects are selected
Unselect Objects		Objects are deselected
Show Objects		All objects are made visible

Action	Condition	Description
Hide Objects		All objects are hidden or invisible
Suppress Objects		Objects are suppressed. If a node is suppressed, none of its children exist in the scene. They are loaded on demand from VDS when this node is resumed later. None of the children of a suppressed node are processed with any filters, but filters still run for the node itself. This is done so that it is possible to find such suppressed nodes with a query and resume them. Children of a suppressed node are not displayed in the scene BOM either. But the suppressed node is displayed as grey in BOM. This action effectively takes objects and their children out of consideration for view and query.
Resume Objects		Suppressed objects are released. This action reverses their suppression, and the objects are once again candidates for filters in queries.
Suppress Procedures		If a procedure is suppressed, the procedure and its associated steps will not display in the Steps window or the scene BOM. Filters can process suppressed procedures so that it is possible to find such procedures with a query, and resume them. The Suppress Procedures action cannot be applied to individual steps.
Delete Procedures		Deletes the selected procedure The Delete Procedures action cannot be applied to individual steps.
Resume Procedures		The suppression applied to procedures is removed, and the procedures and their associated steps are once again available in the *Steps* window and the scene BOM.

Action	Condition	Description
Flag		Sets or clears *Marked* flags on objects, so that there are a number of marks that can be tested with filters. The idea of marking an object is like selecting it, but silently. The mark on that object is maintained, so that you can test for it later. The marks are not saved with the file, and are active only during the current session. This action is used in conjunction with the following:
	Set	Sets flags for objects
	Clear	Clears flags for objects
	Marked	Flags the object as *Marked*
	Marked2	Flags the object as *Marked2*
	Marked3	Flags the object as *Marked3*
	Marked4	Flags the object as *Marked4*
	Marked5	Flags the object as *Marked5*
	Marked6	Flags the object as *Marked6*

3.1.4.1.3.2 Appearance Actions

You can use the appearance action options to perform actions on objects that affect their appearance. For example, you can assign a specific highlight color to all the nodes that you have selected. You can select one or many object actions, from the following options. Descriptions of each option are detailed in the table below:

Action	Condition	Description
Opacity		Assigns opacity to the selected objects. Opacity from 10 - 100% can be selected from the dropdown menu.
Render Mode		Assigns a render mode to the selected objects. All available render modes are listed in the dropdown menu.

Action	Condition	Description
Highlight Objects	*Intensity*	Opens the color picker and allows you to assigns a highlight color for the selected objects. Intensity from 10 - 100% can be selected from the dropdown menu.
Remove Highlight from Objects		Removes any highlight color from objects matching filters in a query statement
Material		Opens the *Select Material* window, and allows you to assign a material by name to objects

If you select the *Material* option, the following action selections can be made in the *Select Material* window:

Field	Functional Description
Material Name	The name of the material
Get from Scene	Selects a material from the scene
Create New Material if Material does not Exist	Creates a new material if the required material does not exist
Diffuse Color for New Material	Opens the color picker and allows you to set the color of the diffuse light that is reflected in a scene. Diffuse reflection is at its greatest when the light strikes a vertex parallel to that vertex normal. As the angle of reflection increases, the effect of the diffuse reflection diminishes. The amount of light reflected is the cosine of the angle between the incoming light and the vertex normal.

3.1.4.1.3.3 Miscellaneous Actions

You can use the miscellaneous action options to perform additional actions on objects. For example, you can zoom the viewport to visible objects, add objects to a layer, and export to an XML list.You can select one or many object actions, from the following options. Descriptions of each option are detailed in the table below:

Action	Condition	Description
Zoom		Zooms the viewport to either the currently selected objects or the visible objects. This is the same as the *View to Active Object*right-click option in SAP 3D Visual Enterprise Viewer. If there are no selected or visible objects, the viewport is not changed. This action is used in conjunction with the following options:
	Selected objects	Zooms the viewport to the currently selected objects
	Visible objects	Zooms the viewport to the currently visible objects
Post hide		
	Unmatched objects	Hides all unmatched objects
	Unselected objects	Hides all unselected objects
Layer		Opens the *Select Layer* dialog, and is used to add the objects to a specific layer
Delete		Deletes the currently selected objects.
Export XML list		Opens the *Export to XML List* dialog box, and is used to create or overwrite the chosen file with hierarchical XML containing all the objects. This file is essentially a parts list and can be used to generate full hierarchical part names as needed for use in CAD systems or other applications. This action is used in conjunction with the following:
	Without metadata	Does not include metadata in the file
	With metadata	Includes metadata in the file

If you select the *Layer* option, the following action selections can be made in the *Select Layer* dialog box:

Field	Functional Description
Layer Name	The name of the layer. Selects a layer from the scene.
Get from Scene	Selects a layer from the scene
Create New if Layer does not Exist	Creates a new layer if the required layer does not exist
Clear Layer before Adding Nodes	Clears the contents of the layer before adding the selected nodes
Delete Layer if Empty (zero nodes)	If there are no nodes to add, the layer is deleted.

You can use the *Export to XML List* dialog to create or overwrite the chosen file with hierarchical XML containing all the objects, marked matching ones from the current filter with `matched="yes"`. This file can be used to generate full hierarchical part names as needed for use in CAD systems or other applications.

If you select the *Export XML List* option, the following action selections can be made in the *Export to XML List* dialog box:

Field	Functional Description
Save In	The location of the saved file
File Name	The name of the saved XML file
Save as Type	The type of file, for example, XML list

3.1.4.1.4 Step 4: Running a Query

Use

Once you have added and checked your query statements, the next step is to run the query.

Activities

Running a Newly Created Query

1. Create a query, make your statement selections as required, and perform one of the following:
   - Click the *Auto Hide* icon in to keep the query window visible when the query runs. This allows the checking of each statement's results.
   - Leave the *Auto Hide* icon out to make the query window disappear when the query runs. This allows slightly faster execution.

2. Choose *Run Query*.
   In the top right-hand corner of the statement, information is provided about the number of objects selected from the total number of objects present, and the number of actions performed.

Running an Existing Query

1. Choose *Run Query from File*.
2. Search for and select the required query file.
3. Choose *Open*.

> **i** Note
>
> When you run a query from the *Action* > *Run Query* menu, or from the *Run Query* popup, the chosen query will need to be run again, soon, or immediately.
>
> The query file appears at the top of the pop up menus so that it could be chosen without having to navigate through folder to find the same named query.

3.1.4.2 Reordering Items in the Query

Use

Multiple statements in a query are run in the order in which they appear. If the query contains multiple filters, these are also run in the order in which they appear. The order of the actions is not important, but the zoom actions are always performed last.

Once created, there are options to reorder items in the query. You can change the order of statements, filters, and actions to reflect the order in which they should be run. This is achieved by using the arrows to the right of the statements.

Activities

1. Create a query with multiple items.
2. Hover the cursor over the filter, action, or statement to reorder.
   The reordering arrows display to the right of the selected item.
3. Perform one of the following:
   - Click *Up* to move the selected filter, action, or statement up.
   - Click *Down* to move the selected filter, action, or statement down.

3.1.4.3 Disabling and Deleting Items in the Query

Use

You can delete statements, filters, and actions if they are no longer required in the query. Alternatively, if you wish for the statement, filter or action to remain in the query, but not be used at this time, you can disable it. If a statement, filter, or action is disabled, it is ignored during query processing.

You can disable an entire statement (filters and actions), by clicking on the checkbox by the title at the top left of the statement. Disabled statements display as greyed out. You can also disable individual filters or actions.

Activities

Deleting an Item in a Query

Open or create a query, select a filter, action, or statement to delete, and choose the *Delete* icon to the right of the selected item

Disabling an Item in a Query

Open or create a query, select a filter, action, or statement to disable, and clear the checkbox to the left of the selected item.

The item displays as grayed out in the query, and will be ignored during processing. To reinstate when required, click the checkbox.

3.1.4.4 Selection of Procedures Using Query

You can search for procedures in a scene using the query function. Unlike searching for objects, searching for procedures only works with a subset of the range of query options available in the *Query* tab (right click on the Viewport, then navigate to *Search...* > *Query* tab).

Query Options for Procedures

The *Initial Scene Setup* option that can be applied for querying procedures is the *Resume All* option.

The filters that can be used to search for procedures include:

- *All Objects*
- *Name*
- *Metadata / VE ID*

The actions that can be applied to procedures include:

- *Suppress Procedures*

- *Delete Procedures*
- *Resume Procedures*

You can only use the query functionality to search for procedures, and not individual steps.

3.1.5 Selection and Activation of Model Views

Use

In many cases, model views associated with the 3D scene you are currently displaying are available. You can use these model views in exactly the same way as the selected and displayed 3D scene itself. Model views offer an alternative way of using the provided visual information based on already well known and established scenes. Model views may also include detailed views of important parts of your scene. Model views offer an economic way of quickly providing recognized and effective scene information for general use. Several related model views constitute a portfolio.

Activities

The available model views are presented in the *Model Views* window:

Selection and Activation

In the *Model Views* window, you can select the required model view. To display your selected model view, left-click the thumbnail or right-click it and choose *Activate* in the context menu.

Deselection

To deselect a selected model view and return to the initial standard scene, you must choose the scene in the selection table again, and then choose *Display*.

3.1.6 Selection and Activation of Steps

Use

Any steps associated with the 3D scene you are currently displaying are also available for your use. These steps may consist of zero to many animated sequences, and provide important explanatory animations necessary in connection with your selected scene. Several related steps constitute a procedure. You have the choice of playing the complete procedure or the individual steps.

Activities

The available steps and procedures are presented in the *Steps* window:

Selection and Activation

In the *Steps* window, you can select the required procedure or step. To play your selected procedure or step, perform one of the following:

- Right-click the procedure or step and then choose *Activate* in the context menu, or double-click the procedure title or step thumbnail. Selecting the procedure itself with play all steps from beginning to end.
- Choose the *Play* control element on the animation toolbar.
- Right-click the viewport, choose *Animate Options* in the context menu, and then choose *Play*.

Deselection

To deselect a selected procedure or step after playing it and return to the initial standard scene, you must choose the scene in the selection table again, and then choose *Display*.

3.1.7 Selection and Activation of Sequences

Use

You can select and activate individual sequences provided with a scene. These sequences can be used in a scene step, which can consist of one or more sequences, or in an animated scene.

Activities

The available sequences are presented in the *Animation* toolbar menu.

Selection and Activation of Sequences Used in A Step

Right-click the *Animation* toolbar, choose *Sequences* in the context menu, and then choose the required sequence.

After right-clicking the *Animation* toolbar again, or right-clicking the viewport, and choosing *Animate Options* from the context menu, you can then select the play mode by choosing either the *Simple*, *Cyclic*, or *Ping Pong* menu options.

To play the selected sequence, either choose the *Play* control element in the *Animation* toolbar, or right-click the viewport, choose *Animate Options* in the context menu, and then choose *Play*.

Selection and Activation of Sequences Used in an Animated Scene

Right-click the *Animation* toolbar and choose the required sequence.

After right-clicking the *Animation* toolbar again, or right-clicking the viewport, and choosing *Animate Options* from the context menu, you can then select the play mode by choosing either the *Simple*, *Cyclic*, or *Ping Pong* menu options.

To play the selected sequence, either choose the *Play* control element in the *Animation* toolbar, or right-click the viewport, choose *Animate Options* in the context menu, and then choose *Play*.

Deselection of Sequence

To stop playing the selected sequence, either choose the *Stop* control element on the *Animation* toolbar, or choose *Stop* in the *Animate Options* context menu.

3.1.8 Conversations within Collaboration

Use

The comment and redline tools are used to create different types of comments. Comments group together into a conversation, enabling you to easily follow a particular collaboration thread.

If you create a comment using the redline tools, you also have the option of being able to project that comment directly onto the model. The comment then follows the contours of the model when it is rotated.

When you select one of these tools, you can begin creating a conversation by clicking the model surface to place the start point. At this point the cursor changes to a small cross. Certain actions are then required to finish creating the comment, and these differ depending on the tool selected.

Saving Collaboration Information

When working with collaboration conversations and comments in SAP 3D Visual Enterprise Viewer, you can save them when the file is saved. The way in which this is done, depends on whether you are saving an RH file, or a VDS file.

File Type	Functional Description
VDS	Collaboration conversations and comments are saved in a separate .xml file. This `.xml` file has the same prefix and is saved alongside the `.vds` scene file. **i Note** To reload the collaborations, both the `.vds` scene file and the companion `.xml` file must be present in the same folder and have the same filename prefix.
RH	Collaboration conversations and coments are saved within the file

Activities

The existing conversations are presented in the *Collaboration* window:

Creating a Comment

In the *Collaboration* window, you can select the required comment tool. To create a comment, perform one of the following:

Comment Type	Action
Text, point, arrow, or a line comment	Click where you want to place the start point and drag to the leader length.
Circle note comment	Click where you want to place the start point, and drag outwards and inwards to set the circle radius. Click once more to set the leader length.
Arc comment	Click where you want to place the start point, click again to place the center of the arc circumference. Click once more to place the end point.
Circle comment or a rectangular comment.	Click where you want to place the start point and drag outwards and inwards to set the circle radius or size.
Polyline comment	Click where you want to place the start point, click to place the second point, and so on, then right-click to place the end point.
Freehand comment	Hold down the left mouse button and drag to set the shape.
Cloud comment	Click where you want to place the start point and drag outwards to set the size.

If you are creating a comment containing text, enter the required text information in the window, and set a link, if required. Once you have finished creating your comment, the conversation is added to the *Collaboration* window, and displays the user name, creation date, and creation time information. The collaboration layer object and the newly created thread display in the 3D objects list in the scene tree.

Adding a Comment to an Existing Conversation

To add a comment to an existing conversation, highlight the required conversation in the *Collaboration* window, and select the required comment tool. Create a comment. The comment is added to the selected conversation.

Projecting a Redline Comment onto the Surface of the Model

To project redline comments onto the model, choose  and choose one of the redline comment tools in the *Collaboration* window. Drag the comment to the required size in the viewport. If you are creating a conversation, make the selections you require and choose *OK*.

The new redline comment displays in the collaboration window, and projects onto the model in the viewport.

Showing and Hiding Comments

To display or hide comments, deselect the conversation in the *Collaboration* window.

Deleting a Conversation

To delete a conversation, select the conversation that you wish to delete in the *Collaboration* window, and choose *Delete Selected Conversation*.

Deleting a Specific Comment

To delete a specific comment from a conversation, select the comment that you wish to delete, right-click the comment, and select *Delete* from the context menu.

3.1.9 Dynamic Label

You can use this function to display dynamically text or image based business information on 2D and 3D graphics that is updated in real-time from such sources as HANA and MII, allowing you to provide data at a glance in a visual context. This feature is available in all versions of SAP 3D Visual Enterprise Viewer, including mobile ones.

Dynamic label data can be obtained from any system that is linked to the model:

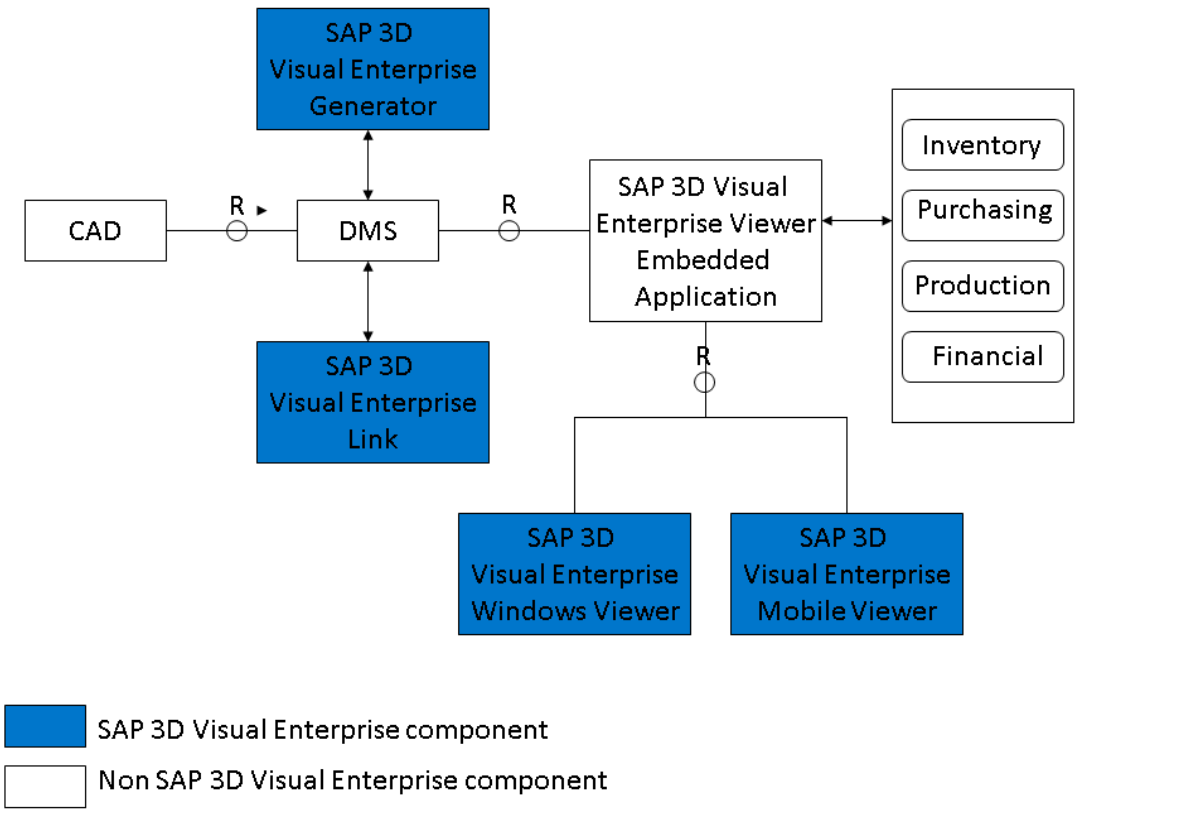

Dynamic Label data storage

For more information about annotations, see SDK documentation.

3.2 Display Techniques

Use

To assist you with your viewing activities, the following display technique functions are provided:

Panning Scenes

When you pan a scene, you can drag the scene around the screen, in any direction, and place the scene in the required position on the viewport. Such placements can be used in connection with page layouts to obtain the correct positioning of your scene or part of the scene on the page. It is also very useful if you are displaying a detailed zoomed-in area of a scene, especially at the edge of viewport. You can then use the panning feature to position the scene more in the middle of the viewport, and in this way regain your scene orientation.

Rotating Scenes

When you choose to rotate a scene, the resulting effect is as if the camera orbits the scene around a central axis. These orbits can lie in all possible directions. During a scene rotation, the focal point of the camera remains constant. By default, the focal point is always orientated at the center of the scene. You can obtain different rotating scene results by means of panning, scaling, and zooming. With this feature, you can view your scene from all possible positions and at different levels of detail to obtain the display you require.

You can also rotate a scene by using the *Turntable* tool. This works in a similar fashion, but with a restriction whereby the camera only rotates around the horizontal or vertical axis.

Walking Through Scenes

When you choose to 'walk through' a scene, the camera moves through the 3D scene as though you are walking on the plane of the ground. Specifically, the *Walkthrough* tool fixes the camera to a particular start position, and then allows you to move the camera around. With this feature, you can view your scene from all possible positions and at different levels of detail to obtain the display you require.

Flying Through Scenes

When you choose to 'fly through' a scene, the camera moves through the 3D scene as though you are flying. The *Fly* tool differs from the *Walk* tool, in that it does not fix the camera to a particular height. With the *Fly* tool, you can navigate forward and backward, controlling your speed, or simply stop and look around from your current position.

Rolling Camera Effect

The rolling camera effect is a special form of rotating scenes. With this feature, you can rotate a scene in the vertical plane as if you were rotating a camera. In a similar way to the rotating scenes feature, this feature is very useful when you want to return a scene to a horizontal position.

Zooming Scenes

Zooming is used to enlarge or reduce the magnification of scenes, and to display them as they best fit in the viewport. Zooming is also used to display a specific small area of a scene in the complete viewport after you have selected it. The resulting, greatly magnified view of this small area of your interest enables you to scrutinize it in detail.

Page Layout

Using the *Page Layout* feature, you can display how complete or partial scenes will appear on a printed page. When you activate the Page Layout feature, the page is always shown in the middle of the viewport. Therefore, you can stipulate the position of the scene on a page by using the panning scenes feature, and then choosing the Page Layout feature. In this way, you can also determine if the whole or only a part of a scene is shown on the page.

Features

The following functions are available using *Rotate/Pan/Walkthrough* in the *2D/3D Editor* toolbar:

Menu Option	Functional Description
	Used to rotate a scene
	Used to rotate a scene around a vertical axis
	Used to emulate walking through the scene
	Used to move the camera through the 3D scene as if you were flying
	Used to pan a scene in all directions

The following function is available using *Page Layout* in the *2D/3D Editor* toolbar:

Menu Option	Functional Description
	Used to display your scene in a page layout

The following functions are available using *Zoom Window/Best Fit* in the *2D/3D Editor* toolbar:

Menu Option	Functional Description
	Used to present your scene as large as possible in the user interface
	Used to select a section of your scene and present this in the user interface

Activities

To use the various display functions, you must first click on the viewport.

Panning a Scene

In the *2D/3D Editor* toolbar, choose *Orbit/Pan/Walk* > *Pan*.

Rotating a Scene

Carry out one of the following:

- In the *2D/3D Editor* toolbar, choose *Orbit/Pan/Walk* > *Orbit*
- In the *2D/3D Editor* toolbar, choose *Orbit/Pan/Walk* > *Turntable*

Walking Through a Scene

1. In the *2D/3D Editor* toolbar, choose *Orbit/Pan/Walk* > *Walk*.
2. Choose *Set Walk Start Position* to set your starting position and camera height.
3. Click and hold anywhere in the drawing area and a small plus sign (cross hair) displays at the selected location.
4. Move the cursor up (forward), down (backward), left (to go left), or right (to go right) to walk through or around your model.
   The further you are from the cross hair, the faster you walk.

Looking Around a Scene in Your Current Position

In the *2D/3D Editor* toolbar, choose *Orbit/Pan/Walk* > *Walk*. Then choose *Look Around* to set your position. Move the cursor up (forward), down (backward), left (to go left), or right (to go right) to pivot around your current position.

Flying Around a Scene

In the *2D/3D Editor* toolbar, choose *Orbit/Pan/Walk* > *Fly*. Left click and hold anywhere in the drawing area and a small plus sign (cross hair) displays at the selected location. Move the cursor up (forward), down (backward), left (to go left), or right (to go right) to fly through or around your model.

The camera moves forward, for positive speeds, in the direction of the cursor.

Looking Around a Scene in Your Current Position with Fly Mode

In the *2D/3D Editor* toolbar, choose *Orbit/Pan/Walk* > *Fly*. Set the speed to zero by moving the wheel up or down. Move the cursor up (forward), down (backward), left (to go left), or right (to go right) to pivot around your current position.

Rolling a Camera

Hold both the left mouse button and the `SHIFT` button depressed, and move the mouse to the left and right.

Zooming a Scene

Carry out one of the following:

- Rotate the mouse wheel either away from you (zooming in) or towards you (zooming out)

- Right-click and hold the mouse button depressed and move the mouse forwards (zooming in) or backwards (zooming out)
- In the *2D/3D Editor* toolbar, choose *Zoom Window/Best Fit* > *Best Fit* .
  The entire scene is then displayed in the viewport with the maximum possible size.
- In the *2D/3D Editor* toolbar, choose *Zoom Window/Best Fit* > *Zoom Window* . Then mark an area in the scene that you want to magnify with the mouse.
  It will be displayed in the complete viewport.
- Double-click on one part of the scene. SAP 3D Visual Enterprise Viewer will zoom in with the focus on this part.

Page Layout

In the 2D/3D editor toolbar, choose *Page Layout*. The boundaries of the page are then displayed in the viewport.

> **i** Note
>
> You can always return to the initial scene displayed by selecting *Home* from the context menu in the viewport or by choosing *Home View* in the *2D/3D Editor* toolbar.

3.3 Scene Presentation Effects

SAP 3D Visual Enterprise Viewer provides you with a wide range of functions, which enable you to present your scenes in many different ways. You can use such presentation effects to increase the effectiveness of your scenes for presentation purposes. For example, with the suitable lighting modes and the correct camera views, you can emphasize the main features and three-dimensionality of a model in a scene. Other presentation effects provide you with support for your inspection, measurement, and graphical illustration activities.

3.3.1 Camera Views

Use

A number of different camera views are used to display selected models in the viewport. These consist of perspective and orthographic views, which are used to switch between the perspective foreshortening and orthographic modes. Isometric, dimetric, and trimetric viewpoints are used for predefined camera views. You can display a model using any of the available camera views.

> **i** Note
>
> The changes to the camera views are not permanent. Regardless of which camera view you select, SAP 3D Visual Enterprise Viewer always starts a new session with its standard settings.

Features

The following camera view functions are available in the *2D/3D Editor* toolbar:

Submenu Options	Functional Description
	Used to select a perspective projection
	Used to select an orthographic projection

The following camera view functions are available in the viewport using the context menu:

Context Menu Options	Functional Description
Perspective	Used to display a view of the model in perspective projection mode. The default projection mode is parallel, and is used when this option is not selected.
Orthographic	Used to select an orthographic viewpoint for viewing a model. This selection can be made by means of the *Top*, *Bottom*, *Left*, *Right*, *Aft (Back)*, and *Front* submenu options. The camera then displays the model accordingly.
30° Isometric	Used to view the model using a 30° isometric viewpoint. All lengths are parallel to the axes and are displayed at their true length.
Dimetric (12°/12°)	Used to view the model using a 12°/12 dimetric viewpoint.
Dimetric (42°/7°)	Used to view the model using a 42°/7 dimetric viewpoint
15°/35° Trimetric	Used to view the model using a 15°/35° trimetric viewpoint.

For the selection of these isometric, dimetric, and trimetric viewpoints, the following submenu options are provided:

Submenu Option
LTF (Left-Top-Front)
LTA (Left-Top-Aft)
RTA (Right-Top-Aft)
RTF (Right-Top-Front)
LBF (Left-Bottom-Front)
LBA (Left-Bottom-Aft)
RBA (Right-Bottom-Aft)
RBF (Right-Bottom-Front)

Activities

Selecting Perspective Projection

Carry out one of the following:

- In the *2D/3D Editor* toolbar, choose *Perspective/Orthographic Projection* > *Perspective Projection*.
- Right-click the viewport, and in the context menu choose *Camera View* > *Perspective*.

Selecting Orthographic Projection

Carry out one of the following:

- In the *2D/3D Editor* toolbar, choose *Perspective/Orthographic Projection* > *Orthographic Projection*.
- Right-click the viewport, and in the context menu choose *Camera View* > *Orthographic*.

Selecting Another Preset View

Right-click the viewport, choose *Camera View* from the context menu, and then click the name of the view you want to apply.

Deselecting the Camera View

To undo your camera view changes, you can choose *Home* in the context menu or select *Home View* in the *2D/3D Editor* toolbar.

3.3.2 Display Menu

Use

You can use the options available in the display menu to control how a scene is displayed, and determine whether objects are displayed or hidden. Any settings you make are applicable to the entire scene. Some of the functions made available to you in the *Display* menu are similar to those also offered in the *2D/3D Editor* toolbar.

Features

The following *Display* menu functions are available for your use:

Submenu Options	Functional Description
Bones	Used to display or hide bones, if the scene contains any
Cross Section	Used to display or hide a cross-sectional plane

Submenu Options	Functional Description
Grid	Used to display or hide the grid (floor) of the scene. The grid provides a sense of model scale, and position, as well as world orientation.
Lights and Cameras	Used to display or hide the scene lighting and camera objects. This setting does not turn lights and cameras on or off.
Specular Lights	Used to display specular lighting (reflection). Specular reflection creates highlights on objects, making them appear shiny. **i Note** If *Rotation Performance* is set to *Speed* in the *Preferences* menu, specular lighting automatically turns off when the frame rate drops to a very low rate, for example, when very large models are displayed. For more information, see Presentation Effects [page 7].
Shadow	Used to display or hide shadows
Scene Bounding Box	Used to display or hide the scene bounding box
Textures	Used to display or hide textures, when used, on objects in the solid render mode
Vertices	Used to display or hide all object vertices
World Axes	Used to display or hide the world axes
Dimensions	Used to display or hide any dimensions associated with a scene
Auto Rotate	Used to rotate the model automatically. When the model is rotated with the mouse, auto rotate is initiated in the direction and at the speed of the mouse action until you click over the model again. **i Note** This command may lessen the display performance
Lights	Used to select one of several predefined lighting modes, as well as to increase and decrease the brightness
Smoothing	Used to select a smoothing angle for a scene in solid or transparent mode

Activities

Many of the functions available in the *Display* menu are self-explanatory, and are therefore not described below. However, necessary activities for functions of general importance are described.

Selecting Menu Options in the Display Menu

Right-click the viewport, choose *Display* from the context menu, and then choose the required menu option.

Deselecting the Cross Section Function

Right-click the viewport, choose *Display* > *Cross Section*.

Displaying and Hiding a Grid in a Scene

Right-click the viewport, choose *Display* > *Grid*.

Displaying and Hiding a Shadow in a Scene

Right-click the viewport, choose *Display* > *Shadow*.

Hiding Dimensions

Right-click the viewport, choose *Display* > *Dimensions*

3.3.3 Lighting Modes

Use

Lighting modes are used to incorporate light settings in a scene. They are used to imitate different kinds of light sources such as the sun, office lamps, or stage and film lighting. The incorporation of such lighting modes results in a more realistic appearance by enhancing the clarity and three-dimensionality of a scene.

When the *Lights from File* mode is selected, any lights loaded from the scene file are activated, and their effect can be seen in the viewport. If no lights are contained in the *Scene Tree* window, then the CAD optimized light setup is used by default. Besides the lights from file mode, a number of other predefined lighting modes can be applied.

> **i** Note
>
> Regardless as to whether there were predefined light settings in a scene, you can always change them when the scene is displayed in the viewport. Note that you cannot save these changes, the scene will be displayed with its original lighting effects when it is reopened.

Features

The lighting modes available from the *Lights* submenu in the *Display* context menu, and their associated functions are listed in the following table:

Submenu Option	Functional Description
Lights from File	Used to apply any lights that are in the *Scene Tree* window

Submenu Option	Functional Description
Colored Lights Red/Green	Used to apply red and green lighting. The applied colors remain separate from one another
Colored Lights Blue/Yellow	Used to apply blue and yellow lighting. The applied colors remain separate from one another
Cube Lights	Used to apply cube lighting
CAD Optimized Lights	Used to apply lighting that is optimized for CAD files
Single Light from Eye	Used to apply a single light originating from the viewer's eye
Increase Brightness	Used to raise the level of brightness
Decrease Brightness	Used to reduce the level of brightness
Restore Brightness	Used to restore the original level of brightness

Activities

To change the lighting modes, right-click the viewport to display the context menu.

Selecting a Lighting Mode

Choose *Display* > *Lights* and then choose the name of the required mode.

Increasing the Level of Brightness

Choose *Display* > *Lights* > *Increase Brightness*.

Decreasing the Level of Brightness

Choose *Display* > *Lights* > *Decrease Brightness*.

3.3.4 Smoothing a Selected Object

Use

This function is used to apply smoothing to selected objects using solid or transparent render modes. This can help you improve the appearance of objects. Smoothing affects the entire scene.

> **i** Note
>
> These settings are not permanent. When you start SAP 3D Visual Enterprise Viewer again, the standard settings will be in place.

Features

The following *Smoothing* functions are available in the context menu of the viewport:

Submenu Options	Functional Description
Use Existing Smoothing Normals	Used to apply the smoothing normals from the current file
20°	Used to apply a 20° smoothing angle
30°	Used to apply a 30° smoothing angle
35°	Used to apply a 35° smoothing angle
Custom Angle	Used to open a dialog, and to then apply a user-defined smoothing angle
Smoothing Disabled	Used to disable all smoothing

Activities

Activating a Smoothing Function

Right-click the viewport. In the context menu, choose *Display* > *Smoothing*, and then choose the required function.

3.3.5 Moving Objects in a Scene

Use

Using this function, you can select specific objects in a scene and move these away from the model (pull apart). By this means, you can move one object after another from a model to obtain a free view of a central part you want to view and inspect. Once you have the required free view, you can also use the *Zoom Window* function to obtain detailed views of the part. You can also use this function to simply place one or more objects differently in a scene.

Once you have completed your viewing and inspection activities, you can return the objects you have moved back to their original positions in the model (reassembly) with a single action using the *Pull Apart* and *Re-assemble* functions in the *2D/3D Editor* toolbar.

Activities

Moving a Selected Object from a Model (Pulling Apart)

In the *2D/3D Editor* toolbar, choose . Then click the object you want to move and drag it to the required position in the scene.

Moving Objects Back to Their Original Positions in a Model (Reassembly)

In the *2D/3D Editor* toolbar, choose .

Moving Objects Back to Their Original Positions in a Model by Returning Directly to the Standard View

In the *2D/3D Editor* toolbar, choose .

More Information

2D/3D Editor Toolbar [page 34]

3.3.6 Detail Views

Use

Detail views allow you to view additional 3D viewports in a scene. Multiple views can be opened in a scene. When closed, they appear as special callouts. Each detail view has full camera manipulation, and contains a specific view of the model. The *Detail View* option allows you to 'zoom in' to a specific region in your model, in order to view an object in more detail.

> **i** Note
>
> Detail views are created in SAP 3D Visual Enterprise Author.

Activities

Opening a Detail View

Highlight the area on the model that you want to show in detail, and click the center of the area

Closing a Detail View

Double-click the detail view.

3.3.7 Cross-Sectional Views

Use

You can use the functions described here to provide a cross-sectional view of your scene. Using cross-sectional planes, you can exclude parts of your scene and thus provide dissected views of your scenes. Such planes can be freely moved to slice through a model in the X, Y, and Z planes.

To obtain the exact cross-sectional views you require, you can rotate the planes. For an even more specific and detailed view, you can use the best fit function in combination with the cross section functions, as well as manually zooming in.

> **i** Note
>
> You can modify the settings for cross sections in the *Settings* dialog box. These settings are permanent. That is, the settings you make here are stored in SAP 3D Visual Enterprise Viewer until you change them again.

Features

The following *Cross Section* functions are available in the *2D/3D Editor* toolbar:

Menu Option	Functional Description
	Selects cross-sectional views perpendicular to the X plane
	Selects cross-sectional views perpendicular to the Y plane
	Selects cross-sectional views perpendicular to the Z plane
	Reverses the direction of the cross-sectional view
	Resets the original starting position for cross-sectional activities for a particular plane
	Opens the *Settings* window, in which you can set various options for cross-sectional viewing

The following settings can be made in the *Settings* window:

Checkboxes and Fields	Functional Description
Create Outline	Creates an outline of a cross-sectional plane
Create Caps	Creates caps
Objects Color	Maintains object color when performing the cross-section
Cross Section Outline Width	Selects the width of the outline for a cross-sectional plane
Cross Section Outline	Selects a display color for the outline of a cross-sectional plane
Cross Section Plane	Selects a display color for the cross-sectional plane
Cross Section Opacity	Determines the opacity of the cross section plane

If the *Create Caps* checkbox is selected, coverings are shown over openings in the cross section, for example, over the end of a pipe.

Activities

Selecting a Cross-Sectional Plane

In the *2D/3D Editor* toolbar, choose *Cross Section*, and then click the required X, Y, or Z menu option.

Reversing the Direction of View at the Selected Cross-Sectional Plane

In the *2D/3D Editor* toolbar, choose ▶ *Cross Section* ▶  ▶

Resetting a Cross-Sectional Plane

In the *2D/3D Editor* toolbar, choose ▶ *Cross Section* ▶  ▶

Selecting Your Cross-Sectional Settings

In the *2D/3D Editor* toolbar, choose ▶ *Cross Section* ▶  ▶. Make your entries in the *Settings* window and choose *OK*.

Ending Your Cross-Sectional Activities

Right-click the viewport, choose *Display* from the context menu, and then click (deselect) *Cross Section*.

3.3.8 Render Modes

Use

Render modes are used to apply preset scene settings that manipulate a number of scene display elements. This manipulation results, for example, in the scene being presented in a solid, transparent, or wireframe way. To enhance the clarity and three-dimensional view of a scene, you can employ different rendering styles to obtain more realistic and fitting appearances.

Features

You can use the *Model Render Mode* function to select the render mode in which your scene is to be displayed from the offered menu options.

Menu Options	Functional Description
	Used to display objects in a scene as transparent bounding boxes
	Used to display the scene in a solid manner
	Used to display the scene in a transparent manner
	Used to display the scene as a solid wireframe
	Used to display the scene as a line illustration
	Used to display the scene in a solid outline manner
	Used to display the scene as a shaded illustration
Other	Used to access more menu options

The following options are displayed when you choose *Other* from the menu:

Menu Option	Functional Description
	Used to display the scene within several bounding boxes
	Used to display the scene within several transparent outlined bounding boxes

Menu Option	Functional Description
	Used to display the scene in a transparent wireframe manner
	Used to display the scene as a wireframe
	Used to display the scene as a shaded wireframe
	Used to display the scene as a hidden wireframe
	Used to display the scene in a multiple vertices manner
	Used to display the scene in a shaded vertices manner

Activities

To apply a render mode to your scene, choose *Model Render Mode* in the *2D/3D Editor* toolbar, and then choose the required mode menu item.

3.3.9 X-Ray Selections

Use

You can use these functions to display objects as transparent in the viewport, based upon one of three available settings.

> **i** Note
>
> You can modify the settings for x-rays in the *Settings* dialog box. These settings are permanent and stored in SAP 3D Visual Enterprise Viewer until you change them again.

Features

The following *X-Ray* functions are available in the 2*D/3D Editor* toolbar:

Menu Option	Functional Description
	Used to display all objects as opaque
	Used to apply transparency to all objects that are not selected. Selected objects are displayed as opaque.
	Used to apply transparency to all selected objects. Objects that are not selected are displayed as opaque.

Activities

Making an X-Ray

In the *2D/3D Editor* toolbar, choose *X-Ray*, and then click the required menu option.

Selecting Your X-Ray Settings

Right-click the viewport, choose *Preferences* from the context menu, and then click *Settings*. Make your entries in the *Settings* dialog box and choose *OK*.

Ending Your X-Ray Activities

In the *2D/3D Editor* toolbar, choose *X-Ray*, and then click *None*.

3.3.10 Display Modes

Use

You can set the display modes to display either the entire application (standard display mode) or only the viewport (full-screen display mode) across your monitor.

When the full-screen display mode is chosen, the information panel and toolbars are still available. If the rollover toolbar function has been chosen, the information panel and toolbars first appear when the mouse is moved to one of the edges of the screen. If the rollover toolbar function has not been chosen, they are immediately displayed. Whether the rollover toolbar function has been selected or not, if any of the information panel windows are open when a full-screen display mode is chosen, the information panel and toolbars are immediately displayed.

Activities

To set the display mode, carry out one of the following:

Switching to the Full-Screen Display Mode from the Standard Display Mode

1. Choose  in the *2D/3D Editor* toolbar.
2. Right-click the viewport, and choose *Full Screen* from the context menu.

Switching to the Standard Display Mode from the Full-Screen Display Mode

1. Choose *Exit Full Screen Mode* in the *2D/3D Editor* toolbar.
2. Right-click the viewport, and choose  from the context menu.

Related Information

Presentation Effects [page 7]

3.3.11 Transforming 2D Images

Use

You can perform various functions on 2D images, including flipping and rotating the image, and applying grayscale. Note that the 2D options only display when you are viewing a 2D image.

Activities

Flipping the Image Horizontally

In the *2D/3D Editor* toolbar, choose .

Flipping the Image Vertically

In the *2D/3D Editor* toolbar, choose .

Rotating the Image

In the *2D/3D Editor* toolbar, choose  or , depending on your requirements.

Applying Grayscale to the Image

In the *2D/3D Editor* toolbar, choose .

Displaying or Hiding all Smoothing from the Image

In the *2D/3D Editor* toolbar, choose .

More Information

2D/3D Editor Toolbar [page 34]

3.4 Animated Presentations

Animated presentations are often provided within a 3D scene. The basic component of animated presentations is a sequence. Two types of animated presentations may be offered.

Steps and Procedures

Each step may contain any number of animated sequences. These animations are specifically associated to the step and play from start to end. A procedure is a group of steps. The steps in a procedure can either be played individually, or in a seamless run from the first to last step.

Steps and procedures are activated using the control elements and menu options made available by the following:

- The  icon in the *Information* panel
- The *Animation* toolbar
- The animation options available in both the *Animate Options* menu in the viewport and the *Animation* toolbar

> **i Note**
>
> When a step is selected in the *Steps* window, the *Animation* toolbar is specifically cued for this step and its sequences. To play a particular sequence of the step, it must be specifically selected.

Sequences

Sequences provide animation in scenes without procedure-based steps. They can only be accessed and played using the latter two methods listed above.

3.4.1 Animation Toolbar Menu

Use

You can use the *Animation* toolbar menu to access the *Animation Options* window, in which you can set and modify animation settings. These settings are then used when your animations are played. You can also select the specific sequences you want to play. For sequences (not for steps and procedures), you can also set and apply the *Simple*, *Cyclic*, and *Ping Pong* menu options.

Features

For sequences, the following *Animation* toolbar menu options are available for your use. When a step or procedure is selected, only the *Options and Sequences* menu options are initially displayed.

Context Menu Option	Functional Description
Options	Used to open the *Animation Options* window
Simple	Used to set the animation to play once from beginning to end
Cyclic	Used to set the animation to play continuously from beginning to end
Ping Pong	Used to set the animation to play continuously back and forth between the beginning and end
Sequences	Used to list the available associated sequences, from which you can choose one for display.

After you have chosen *Options* in the context menu, the *Animation Options* window opens.

Field Areas	Functional Description
Sequence	Lists the following details for each available scene animation sequence *Name*: The name of the animation sequence *Start*: The number of the frame at which the animation begins *End*: The number of the frame at which the animation ends *FPS*: The frames per second, that is, the number of frames of an animation sequence that are displayed every second. The higher the frame rate, the smoother the animation. This setting is related to the playback system as various film, computer, and TV playback systems differ.
Playback Control	Used to select the percentage playback speed and to skip frames. *Speed*: Determines the percentage playback speed, that is, the speed at which the animation plays back as a percentage of real-time speed. For example, if the animation is 10 seconds long and you enter 100%, it will take 10 seconds to playback. However, if you enter 50%, the animation will take 20 seconds to playback. *Skip frames*: Frames are skipped if the computer cannot keep pace with the current frame rate (FPS). This results in certain frames being left out when playing the animation. Otherwise, all frames are displayed during playback even if they are not displayed at the current frame rate. *Continuous time*: Calculates the animation between frames (frame interpolation) as you move the time/frame slider. *Snap to frames*: Moves from frame to frame, without frame interpolation, when you play the animation. *Default fly to camera time*: Sets the default fly to camera time. *Play all steps cyclic*: Plays all animation continuously from beginning to end.

Field Areas	Functional Description
Time Display	Used to select how to display the time in the time/frame slider. This setting is related to the FPS and overall number of frames in the sequence. *Frames*: Displays the time in frames *Seconds*: Displays the time in seconds *MM:SS*: Displays the time in minutes and seconds *SMPTE*: Displays the time in the Society of Motion Picture Technical Engineers standard. This standard is used for the measurement of video and television production time.

Activities

Opening and Displaying the Animation Toolbar Menu for an Animated Scene

Right-click the *Animation* toolbar, and the *Animation Toolbar* menu with all five menu options is displayed. If there is more than one sequence, you must select one.

Opening and Displaying the Animation Toolbar Menu for a Selected Step or Procedure

Right-click the *Animation* toolbar, and the *Animation Toolbar* menu with the *Options and Sequences* menu options is displayed. If you then select a particular sequence and right-click the toolbar again, the other three menu items are also displayed.

Selecting a Particular Menu Option in the Animation Toolbar Menu

After the five menu options are displayed in the *Animation Toolbar* menu, simply click the required option, for example the *Ping Pong* menu option, to activate it.

Selecting the Animation Options Menu

After the *Animation Toolbar* menu is displayed, simply click the required *Animation Options* menu option. You can then make your entries in some of the following window field areas

Example

If the time/frame slider displays frame 45 out of 90 and the FPS is set to 30, the time/frame slider displays the following values for each of the different time display options:

- Frames: 45/90
- Seconds: 1.5/3
- MM:SS: 0:1,50/0:3
- SMPTE: 0:1:15/0:3:0

3.4.2 Animation Options Context Menu

Use

In addition to the functions provided by the *Animation* toolbar, the *Animation Options* context menu in the viewport also enables you to control model animation. Compared to the *Animation* toolbar, the *Animate Options* menu also provides an *Auto Rotate* menu option.

Features

Context Menu Option	Functional Description
Previous (Begin)	Used to return to the previous step, and play the animation sequence. (Begin sets the animation to the first frame).
Play/Stop	Used to play the animation sequence. The function of the button changes to stop as soon as the animation starts.
Next (End)	Used to move to the next animation step, and play the animation sequence. (End sets the animation to the last frame).
Options	Used to open the *Animation Options* window (see below)
Simple	Used to set the animation to play once from beginning to end
Cyclic	Used to set the animation to play continuously from beginning to end
Ping Pong	Used to set the animation to play continuously back and forth between the beginning and end
Auto Rotate	Used to rotate the model in any direction given by left-clicking and dragging the mouse. The speed of rotation is also determined by the speed of the mouse movement. The rotation can be stopped by a mouse-click on the scene.

> **i Note**
>
> The menu option names not shown in parenthesis in the table indicate the default names for steps. However, when sequences used in animated scenes are played, the names shown in parenthesis are valid.

Activities

Selecting an Animate Options Menu Option

Right-click the viewport, choose *Animate Options* from the context menu, and then choose your required menu option.

3.5 Measurements

You can use the measurement functionality to make various types of 3D scene measurements. For example, you can add key measurements to your scene and use such measurements to perform manufacturing checks.

When performing a measurement, the elements that can be measured within the object are highlighted when your cursor moves over them. You can limit the types of elements that are highlighted when you perform a measurement using the object element tools:

- **Vertices**: Green 'points' indicating a corner of a polygon where two edges meet, or of a polyhedron where three or more faces meet. A polyhedron is a three-dimensional solid bounded by polygons.
- **Edges**: Lines of intersection between two faces
- **Faces**: Planar surfaces of a geometric solid
- **Arcs**: Lines that curve around a face with a center point displayed in red

The first element that is measured is displayed as bounded; bounding determines the bounds of the measurement. For example, the distance is not calculated past the end of an edge, or off the boundary of a face. The second measurement is unbounded. The unbounding allows you to measure the distance between a face and a plane or the extension of an edge. For example, in the image below the arc is bounded and the face is unbounded.

When you perform a measurement for a single object element, the resulting values are:

- Measurement on a vertex: The position of the vertex in the scene
- Measurement on an edge: The length of the edge
- Measurement on a face: The area of the face
- Measurement on an arc: The radius of the circle

Once you perform a measurement, a dimension object is created in the scene. Dimensions are treated in the same way as other objects, and can be edited and deleted. Various settings can also be applied to the measurement tools to determine the way in which the measurements are calculated and displayed. Note that accuracy is reduced if a model uses a high level of polygon reduction.

Measurements are automatically updated as the objects to which they are associated are moved in the scene. Note that you cannot save measurements when viewing content with Internet Explorer.

The following general statements apply to all measurements made within a scene:

- Once a measurement is made, the related dimension object is created in the scene.
- Dimensions are displayed in the 3D objects list when they are created.
- Using the 3D objects list, you can select, hide, show, and delete dimensions in the same way as other objects.

- When you rotate, scale, or pan models, the dimensions move in relation to the parts while remaining the same size.
- Dimensions can be moved in relation to the model.
- Dimensions are visible by default. To hide them, Dimensions must be deselected in the *Display* context menu.

3.5.1 Making Measurements

The measurement functions are available on the 2D/3D toolbar. You can use the measurement functions to perform the following types of measurements:

- Single-object distance measurements (between vertices, edges, and faces).
- Distance measurements between different objects belonging to your scenes (between vertices, edges, and faces).
- Angle measurements
- Arc and circle measurements
- Distance measurements between two object elements in a cross section
- Delta measurements

In relation to your measurements, you can also perform the following additional functions:

- Restrict the measurements to a specific combination of axes.
- Specify a specific scaling factor for all axes.
- Determine which and how measurements are displayed in a scene
- Reposition measurements in a scene.

Features

The icon displayed for the menu option changes, depending on the function that you have chosen. Once opened, further object element icons (shown in the following table) and a *Cancel* button also display. You can then set the Axis Restriction and Scale Factor icons, and choose any of the other functions, which are required for your measurements.

Object Element	Functional Description
	Restricts measurements either to a particular axis, or to a combination of two or three axes. The following possibilities are available: • X axis only • Y axis only • Z axis only • X and Y axes only • X and Z axes only • Y and Z axes only • X, Y, and Z axes
	Specifies the scaling coefficient to be used on all axes of a scene
	Displays green dots indicating a corner of a polygon at which two edges meet, or of a polyhedron at which three or more faces meet.
	Displays lines of intersection between two faces
	Displays planar surfaces of a geometric solid
	Displays lines that curve around a face with a center point displayed in red
	Cancels the measurement activity

Activities

Setting and Selecting the Required Object Element Icons

When chosen,  and  provide dropdown menus from which you can choose the required axis combinations and scale factors. The other object element functions support your measurement activities by limiting the number and type of highlighted elements presented. You can select one or more of these object element functions to determine the types of element required for your measurement. The object element functions you have selected are shown highlighted.

Measuring a Single-Object Distance

Choose , and then set and select the required object element icons. Place the cursor over the highlighted element from which you want to start your measurements, and click it. Move the cursor to the other

highlighted element on the same object, and click again. Drag the dimension away from the object to an area where you want to display it and click again.

Measuring a Distance Between Two Objects

Choose , and then set and select the required object element icons. Place the cursor over the highlighted element on the object from which you want to start your measurements, and click it. Move the cursor to the other highlighted element on another object, and click again. Drag the dimension away from the object to an area where you want to display it and click again.

Measuring the Radius or Diameter of an Arc or Circle

Choose , set  and , and then select . Place the cursor over the highlighted arc or circle element you want to measure and click it. Move the cursor to the center point of the arc or circle and click again. Drag the dimension away from the object to an area where you want to display it and click again.

Measuring an Angle

Choose , and then set and select the required object element icons. Place the cursor over the highlighted element from which you want to start your measurements, and click it. Move the cursor to another highlighted element at the apex of the angle you want to measure. Click again, and then move it on to a third highlighted element and click once more. Drag the dimension away from the object to an area where you want to display it and click again.

Measuring an Angle Between Two Points on an Arc or Circle

Choose , set  and , and then select both  and . Place the cursor over a point in the highlighted arc/circle element and click it. Move the cursor to the center point of the arc or circle and click again. Move the cursor to a second point in the highlighted arc/circle and click once more. Drag the dimension away from the object to an area where you want to display it and click again.

Measuring a Line and Calibrating

Choose , and then make the measurement for which you want to calibrate. Select the required distance and units from the *Measurement Calibrate* window. The calibration is made and further dimensions within the scene are based upon this measurement.

3.5.2 Making Delta Measurements

To measure the distance between two arbitrary points by coordinate distance, you use delta measurement.

The following diagram illustrates both the direct distance from point A to point B, and also the delta for the world axes x, y and z.

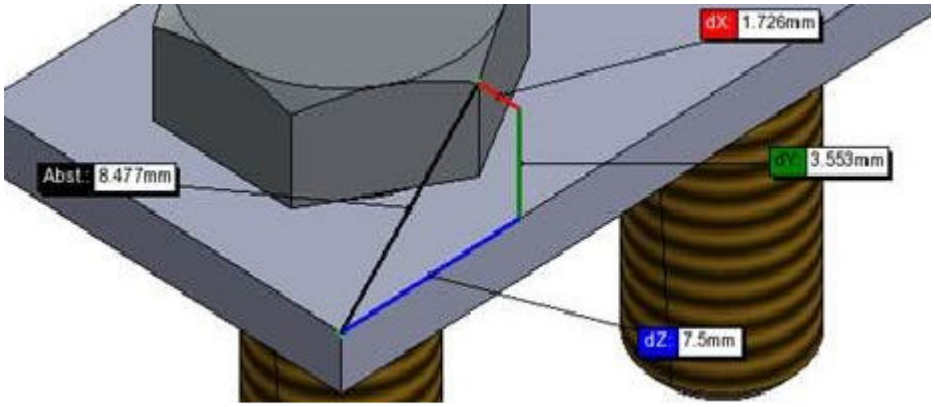

> **i** Note
>
> Delta measurement is available only for 3D and 3D Hybrid files

Activities

Measuring a Delta Distance between Two Objects

Choose , and then click to select the first vertex. Place the cursor over your second vertex, and click it.

Both direct and delta measurements display in the scene.

3.5.3 To Reposition Dimensions

Context

Once measurements are added to the scene, you can reposition your dimension text labels as required. When *Move* mode is enabled, you can drag the text label around in the viewport space to change the position of measurement.

> **i** Note
>
> Move mode is available only to Distance and Angle measurements. For Angle measurements movement is limited because leader lines must be an extension of reference features – edges.

Procedure

1. Make your required measurement.
2. Choose  from the 2D/3D toolbar.
3. Select the text label of the measurement that you wish to move and drag it to the required position.

   The text label is repositioned.

> **i** Note
>
> There is no canceling of a move measurement because once the drag is stopped, it is in the new position.

3.5.4 Measuring Cross Sections

Use

You can also use the measurement functions to measure the distance between two object elements in a cross section. This works in much the same way as measurements made to the scene, but you need to create the cross section first.

When you choose *Cancel*, your measurement activities are interrupted and the measurement tool is restored to its initial state on the *2D/3D Editor* toolbar, showing only a single icon with a neighboring arrow.

Activities

Measuring a Cross Section

1. In the *2D/3D* editor toolbar, choose , and then click the required *X*, *Y*, or *Z* menu option.
2. Choose  or .
   The *Measurements* dialog box will display and request confirmation that you wish to measure a cross section.
3. Click *Measure Cross Section*, and then set and select the required object element icons.
4. Place the cursor over the highlighted element on the object from which you want to start your measurements and click it.
5. Move the cursor to the other highlighted element on another object and click again.
6. Drag the dimension away from the object to an area where you want to display it and click again

3.5.5 Measurement Global Settings

Use

You can use the *Measurement Global Settings* to modify the appearance of measurements displayed in your scenes. The settings you enter influence the display of dimensions, arc, and circle measurements, and the units in which angles are measured.

Features

Field	Functional Description
Measurement Axis	Defines the active axes for measurement • *X*: The selected object's X axis is active. • *Y*: The selected object's Y axis is active. • *Z*: The selected object's Z axis is active.
Display Dimension	Establishes the way in which measurements are to be displayed. • *Vectors*: Displays the measurement as a vector. • *Billboards*: Displays the measurement as a billboard. That is, the measurement rotates to always face the camera. When printed to a vector-based file, the measurement is converted to vector line art.
Precision	Determines the number of decimal places that are displayed in a dimension. Maximum is six.
Font	Sets the font type and style and size for billboards
Units	Selects a standard unit of measurement
Override Value	Overrides the measured distance with a manually entered measurement. For example, if the measurement is 10.599, but you want it to display as 10.600, as a rounded figure, you can type this value into the *Override* field. An offset is calculated (0.001) so that dynamic measurements can be used and still read the corrected value.
Suffix Text	Appends text to the end of the measurement. The suffix can include text that indicates tolerance; for example, *+/-5mm*.
Arcs	Establishes the measurement dimension for arcs and circles • *Radius*: Measures the circle's radius • *Diameter*: Measures the circle's diameter

Field	Functional Description
Angles	Establishes the measurement dimension for angles. • *Degrees*: Measures the angle in degrees • *Radians*: Measures the angle in radians
Always on Top	Displays the dimension and dimension lines on top of all the objects in the scene
Draw Construction Lines	Displays the red construction line between the points that are being measured
Draw Surface Features	Indicates the object elements (for example, vertices, edges) in green, which were used for a measurement
Skip Transparent Geometry	Disregards all transparent objects in the scene, when looking for a vertex, edge, face, or arc
Line Color	Selects a line color
Text Color	Selects a color to use for coloring text
Measure Line Color	Selects a color to use for coloring the measurement lines
Construction Line Color	Selects a color to use for coloring the construction lines
Surface Color	Selects a color to use for coloring the surface features.
Cross Color	Selects a color to use for cross coloring.
Vector Font Scale	Determines the font size of the displayed measurement for vector displays.

Activities

Changing the Measurement Global Settings

To change the *Measurement Global Settings*, the  icon on the *2D/3D Editor* toolbar must be in its initial position (only one icon displayed, other object element functions must be collapsed). Once the single icon is displayed, choose the *Settings* dropdown arrow.

The *Measurement Global Settings* dialog window opens. Once you have made your settings, choose *OK* to activate them.

> **i** Note
>
> The changes you make to the *Measurement Global Settings* are permanent. The settings you make here are stored in SAP 3D Visual Enterprise Viewer until you change them again.

Related Information

2D/3D Editor Toolbar [page 34]

3.6 Visual Comparison

Use

The Visual Compare feature allows you to compare two versions of an object or assembly. It allows you to allocate colors to:

- Union parts; that is, parts that appear in both versions.
- Parts unique to version A (Model A)
- Parts unique to version B (Model B)

> **i Note**
>
> Currently, only the DirectX 9 display driver supports the Visual Compare functionality.

Visual Comparison for Raster 2D Images

Raster Visual Compare shows a Composite (UNION of what is in common) and Unique file differences in one color for one file and another color for the other file.

> **i Note**
>
> Raster compare works only for Black and White files, and we recommend that you use the legacy Raster compare for Color files. To use legacy mode, a registry setting change is required. For further information, refer to Operation Information section in the Viewer Administration Guide.

Features

Visual Compare Window

Function	Description
Load Model B	Loads another model (Model B) into the scene.
Unload Model B	Unloads Model B from the scene.
Show Composite	A viewing mode that shows all the models loaded into the scene.
Show Difference	A viewing mode that only shows parts that are different between the loaded models.
Show Union	A viewing mode that only shows parts that are similar between the loaded models.
Show Version A only	A viewing mode that only shows version A (Model A).
Show Version B only	A viewing mode that only shows version B (Model B).

For 2D vector images, all of the viewing modes are available. For 2D Rasters, *Show Composite* and *Show Union* viewing modes are disabled.

For 3D objects or assemblies, the *Show Difference* and *Show Union* viewing modes are disabled.

The following assumptions are made during visual comparison of 3D objects or assemblies:

- **If the scene has no marked objects**, all objects are marked as version A. You only specify version B objects.
- **If the scene contains both versions A and B**, *Show Composite* mode is automatically displayed.
- **If the scene contains only objects marked as version A**, all other objects are marked as version B, and vice versa.

Visual Compare Settings Window

The *Visual Compare Settings* window is used to assign specific colors to objects so that the version in which they belong is easily distinguishable.

> **i** Note
>
> If you're working with a 2D raster file, this window is unavailable.

Function	Description
Version A color	Used to assign a color for version A (Model A) objects.
Version B color	Used to assign a color to version B (Model B) objects.
Union Parts color	Used to assign a color to objects that appear in both versions.
OK	Closes the window and applies the settings. Any changes made to the settings are saved.
Cancel	Cancels the process and closes the window. Any changes made to the settings are lost.

Activities

Opening the Visual Compare Settings Window

To open the *Visual Compare Settings* window:

1. Click *Visual Compare* on the 2D/3D Editor toolbar.
2. Click *Settings*. The *Visual Compare Settings* window displays.

Performing a Visual Comparison

To perform a visual comparison between two objects:

1. Open a 2D or 3D file.
2. Navigate to *2D/3D Editor Toolbar* > *Visual Compare* .
3. Click *Load Model B*.

Changing the Viewing Mode for Visual Comparison

To choose what to display in the Viewport after loading a second file for visual comparison:

1. Navigate to *2D/3D Editor Toolbar* > *Visual Compare*.
2. Do one of the following:
   - Click *Show Composite* to show the entire object, with versions A and B clearly marked in the assigned colors.
   - Click *Show Difference* to show only those parts that are different between versions A and B.
   - Click *Show Union* to show only those parts that are similar between versions A and B.
   - Click *Show Version A* only to show only those parts marked as version A.
   - Click *Show Version B* only to show only those parts marked as version B.

Exiting Visual Compare Mode

You can exit Visual Compare mode by doing one of the following:

- Click the *Visual Compare* button to exit Visual Compare mode, and still retain the second model loaded in Viewer.
- Click *Unload Model B* to unload the second model from Viewer. Unloading the second model automatically exits Visual Compare mode.

3.7 Visual Assembly Navigation

The Visual Assembly Navigation (VAN) tool provides an alternative way to navigate an assembly. Traditionally, an assembly is browsed via a hierarchy tree. Using VAN, you can navigate up and down the scene tree without any knowledge or reference to the scene tree organization.

VAN provides the ability to drill down on an assembly and associated subassemblies visually. This is an alternative to navigating through the scene tree.

When you start using the VAN tool, a path to your current location in the assembly displays at the top of the viewport. *Assembled View* is similar to a home position concept for VAN, and displays to the left of the colon. The items that follow are called breadcrumbs. As you navigate up and down the hierarchy, selected subassemblies display in the assembly path as breadcrumbs, and these each form a part of the total assembled view.

Clicking *Assembled View* always returns the scene to the model state as it was just prior to activating VAN. Each time you hover the mouse over a section of the assembly path, the selected view is displayed as a thumbnail in the viewport

> **i Note**
>
> VAN snapshots cannot be exported.

The following general statements apply to VAN:

- Once navigation has reached the root node in an assembly, it cannot be navigated any further up.
- An assembly that only consists of parts cannot be navigated any further down and is disassembled into its parts.

- VAN mode can be entered at any time, which means that the model may be pulled apart or contain hidden parts.
- VAN mode is entered at the current level of hierarchy.
- If the model contains hidden parts, by manual selection or query, the parts will remain hidden in VAN mode.
- If the geometry position has changed, as with pull apart, the navigation action will override the part position.

When you enter *Visual Navigation* mode, a number of tools are no longer available for your use. These are:

- *File* > *Save(As)*
- *Visual Compare*
- *X-Ray*
- *Page Layout*
- *Pull Apart* or *Reassemble*
- *Steps*
- *Layers*
- *Model Views*
- *Animation* toolbar, which is not only disabled but hidden
- *Home View*
- *Render* mode. The color and transparency navigation aids are overrides when in *Visual Navigation* mode
- The following context menu options are also unavailable:
  - *Animation* options
  - *Home View*
  - *Display* > *Auto Rotate*
  - *HDR Render*

3.7.1 Navigating with Visual Assembly Navigation

Use

Navigating down a hierarchy is simple and explodes along general axes. If the model has many subassemblies to explode, all subassemblies are visible in the viewport.

The types of breadcrumbs that display in the assembly path vary and the type displayed depends on the type of navigation selected. The available types are as follows:

Type	Functional Description
VAN Assembled	The first breadcrumb in the assembly path is the same as the VAN root.
VAN Disassembled	The first breadcrumb in the assembly path is in a disassembled state with no animation.
VAN Animated Disassemble	The first breadcrumb in the assembly path is in a disassembled state with animation.

> **i** Note
>
> Navigation results in deselection.

Activities

Navigating the Current View

In the *2D/3D Editor* toolbar, choose *Visual Assembly Navigation*. Then carry out one of the following:

- Double-click an empty viewport space to navigate one level up an assembly.
- Double-click an assembly to navigate one level into the assembly.
- Click a breadcrumb to navigate one level up to the previous breadcrumb

Showing the Model as Disassembled During Navigation

In the *2D/3D Editor* toolbar, choose *Visual Assembly Navigation*. Choose the *VAN Disassembled* dropdown arrow and carry out of the following:

- Double-click an assembly to navigate one level into the assembly.
- Double-click an empty viewport space to navigate one level back up an assembly.
- Click a breadcrumb to navigate one level up back to breadcrumb.

Animating a Navigation

In the *Visual Assembly Navigation* mode, choose the *VAN Animated* dropdown arrow and carry out of the following:

- Double-click an assembly to navigate one level into the assembly.
- Double-click an empty viewport space to navigate one level back up an assembly.
- Click a breadcrumb to navigate one level up back to breadcrumb.

Reassembling the Model

In the *Visual Assembly Navigation* mode, choose the *VAN Assembled* dropdown arrow. Then click *Assembled View* from the navigation path at the top of the viewport.

Exiting Visual Assembly Navigation Mode

In the *2D/3D Editor* toolbar, choose *Visual Assembly Navigation*.

3.7.2 Using the Navigation Aids

Use

You can choose which options are selected to aid the Visual Assembly Navigation. There are two options that assist you to visually navigate assemblies, located on the expanded *3D Editor* toolbar. These are:

Function	Functional Description
VAN Color Assemblies	Used to assign colors automatically. Each subassembly at the current navigation level is set to a single color, and at the lowest subassembly, the entire subassembly remains a single color. Individual parts are not colored.
VAN Transparent Assemblies	Used to set all assemblies, other than the assembly over which the mouse hovers, to transparent. If you select an object, the assembly to which it belongs is made solid, and all other assemblies are made opaque.

Activities

Using Color to Identify Different Parts of an Assembly

In Visual Assembly Navigation mode, choose *VAN Color Assemblies* to assign each assembly in the scene a color.

Making the Assemblies Transparent

In Visual Assembly Navigation mode, choose *VAN Transparent Assemblies* to make all assemblies except the current one transparent. This enables you to 'see through' the model.

3.8 Working with Computer Graphics Metafiles (CGM)

Use

The Computer Graphics Metafiles (CGM) format is supported by SAP 3D Visual Enterprise Viewer.

You can work with CGM files as follows:

- Load CGM files
- Render CGM scenes.
- Navigate scenes and interact with hotspots.
- View metadata associated with hotspots
- Print CGM illustrations.
- Display tooltips

- Open hotspot URL links
- Work with CGM files on a touch screen device

> **i Note**
>
> You can't edit or save `*.cgm` files .
>
> You can't insert CGM files into the SAP 3D Visual Viewer add-in, in Office documents.

Features

The following functions are available for your use:

Menu Option	Functional Description
	Views metadata associated with the selected hotspot
	Switches on or off the visibility of layers in the viewport.
	Adjusts the view to show the extent of the CGM illustration
	Switches on or off the highlighting of all hotspot areas.
	Rotates the image in a clockwise direction
	Rotates the image in a counter clockwise direction
	Flips the image horizontally
	Flips the image vertically

Activities

Navigation Actions

You can use the following actions to navigate a CGM illustration:

Function	Desktop Action	Touch Screen Device Action
Activate Hotspot	Single left-click a hotspot	Single tap on a hotspot and release your finger.
Pan	• Left click and drag • Click middle mouse wheel and drag • Left click plus right click and drag	Two finger drag

Function	Desktop Action	Touch Screen Device Action
Zoom In or Out	Right click and drag or roll mouse wheel.	Two finger pinch
Open Context Menu	Right-click the hotspot.	Single tap and hold on hotspot.
Rotate	To rotate left or right 90 degrees, use the Rotate icons on the toolbar .	Single tap required icon.
Flip	To flip horizontally or vertically, use the Flip icons on the toolbar.	Single tap required icon.

Hotspot Actions

When you hover a mouse over a hotspot, the cursor changes to a hand  symbol.

The embedded hotspot area is outlined in red, and the overlay hotspot area is transparent red.

When you click a hotspot, the following actions occur:

- Move or zoom to a location in the file.
- Highlight a region in the file.
- Open a new file.
- Open a Web site.

> **i Note**
>
> If you click a hotspot with no action, then the hotspot is highlighted. If you click the background, all highlights are cleared.

Viewing Metadata

You can view a hotspot's metadata by using one of the following:

- *Metadata View*  button - Click the *Metadata View*  button to open the *Metadata* panel. By default, no metadata is displayed in the *Metadata* panel, even if a hotspot is selected. Metadata is displayed once you click a hotspot while the *Metadata* panel is displayed.
- *Metadata* context menu - You can also view a hotspot's metadata by right-clicking over a hotspot, and then choosing *Metadata* from the context menu. The *Metadata* panel opens, and the hotspot's metadata is displayed. No metadata is displayed if you right-click on an area that isn't a hotspot.

To view a selected hotspot's metadata on a touch screen device, single tap and hold on the hotspot.

> **i Note**
>
> Metadata is displayed only for the hotspot that you clicked on, even if clicking the hotspot results in another object being highlighted in the Viewport.
>
> The *Metadata* panel doesn't show metadata for multiple hotspot selections. It only shows metadata of the last selected hotspot.

Viewing CGM Layers

You can toggle between displaying or hiding a CGM layer using the *Layers* button. To display or hide a CGM layer on the Viewport:

1. Click the *Layers* button to display the *Layers* panel.
2. Do one of the following actions:
   - Select a checkbox for a layer if you want it to be displayed on the Viewport.
   - Deselect a checkbox for a layer if you want it to be hidden on the Viewport.

Displaying Tooltips

To display tooltips, hover the mouse over a hotspot. Note that you can't view tooltips on a touch screen device.

Related Information

Printing Files [page 129]

3.9 Printing Files

Use

You can print any 2D images or 3D models that is currently displayed in the Viewport. Comments and redlines within the 2D image or 3D model can also be printed.

Printing Behavior for Specific File Formats

- CGM files - The printing quality for dynamic label transparency may vary between different printers, depending on the capability of the printers' drivers.
- Microsoft Office documents - The print resolution of 3D models in a Microsoft Office document cannot be adjusted. However, this does not affect the resolution quality of 3D models that are displayed in the document.

Activities

To print in Viewer, you can do one of the following:

- Navigate to *File* > *Print...* in the menu bar.
- Use the *Print* button located in the main toolbar.

> **i Note**
>
> This option is not available if Viewer is embedded in another application.

- Right-click the Viewport, and select *Print* in the context menu.

The *Print* dialog window displays, where you can change the settings for the print job.

Related Information

Print Window [page 130]
Printer Colors Window [page 132]
Output Size Window [page 134]

3.9.1 Print Window

The *Print* window is used to establish print settings for the selected file. These settings determine the appearance of the file when printed.

General Print Window

> **i** Note
>
> The *Print window* is different for CGM file printing. See the **Print Window for CGM Files** section.

Function	Description
Output Size	Opens the *Output Size* window.
Colors	Opens the *Printer Colors* window.
Orientation	The orientation with which you want to print the file. • *Portrait* - The file prints with portrait orientation; that is, vertical positioning on the page. • *Landscape* - The file prints with landscape orientation; that is, horizontal positioning on the page.
Color Mode	Selects the amount of color to be used in printing the file • *Color* - Prints the file in full color. • *Grayscale* - Prints the file in shades of gray. • *Black and White* - Prints the file in black and white.
Margins	Sets the page margins for the printed file • *Left*: Sets the size of the left margin. • *Right*: Sets the size of the right margin. • *Top*: Sets the size of the top margin. • *Bottom*: Sets the size of the bottom margin.

Function	Description
DPI	Determines the resolution of the image or how many pixels are defined in the boundary of a square inch, when printing. This setting is expressed as dots per inch (DPI).
Number of copies	Selects the number of copies that you want to print.
Scale Mode	Determines the scale at which the file prints. • *Scale to Fit Page* - Scales the file to fit the selected page size. • *Print Model to Scale* - Prints the model to a selected scale. • *Print to Defined Output Size* - Allows you to position the model on the page.
Scale	Sets a scale at which the file prints. This option is not available where *Scale Mode* is set to *Scale to Fit Page*.
Printer	Selects the printer on which you want to print the file.
Print to File	Indicates that the file prints to file, instead of to a printer. **i Note** The file output must be a `*.prn` and this setting encodes according to the device type selected.
OK	Closes the window and applies the settings. Any changes made to the settings are saved.
Cancel	Cancels the process and closes the window. Any changes made to the settings are lost.

Print window for CGM Files

The *Print* window for CGM files has the following functions:

Function	Description
Portrait	The file prints with portrait orientation; that is, vertical positioning on the page.
Landscape	The file prints with landscape orientation; that is, horizontal positioning on the page.
Print	Displays the *Print* options window. Here you can select your printer preferences, and print the file.

Related Information

Printing Files [page 129]
Printer Colors Window [page 132]
Output Size Window [page 134]

3.9.2 Printer Colors Window

The *Printer Colors* window applies colors for the printing of scene elements. For example, you can print the bounding box in green and vertices in red. The default material setting can also be modified.

> **i** Note
>
> The *Printer Colors* window is not available when printing CGM files.

Function	Description
Use Screen Colors	Used to print the scene elements on a color printer exactly as they display on the screen.
Background Top	Sets the color of the upper half of the viewports' background gradient.
Background Bottom	Sets the color of the lower half of the viewports' background gradient.
Illustration Background Top	Sets the color of the upper half of the viewports' illustration background gradient.
Illustration Background Bottom	Sets the color of the lower half of the viewports' illustration background gradient.
Bones	Sets the color of the model's bone structure.
Bone-Influence Area	Sets the color of the areas influenced by bones.
Bone Effect Area (Minimum)	Sets the color of the minimum area affected by bones.
Bone Effect Area (Maximum)	Sets the color of the maximum area affected by bones.
Bounding Box of All Objects	Sets the color of the bounding box lines that surround all objects.
Bounding Box of Scene	Sets the color of the bounding box lines that surround the scene.
Bounding Box of Selected Objects	Sets the color of the bounding box lines that surround selected objects.
Transparent Bounding Box	Sets the color of the transparent bounding boxes that surround all objects.
Shadow	Sets the color of the scene shadow.
Default Material Ambient Color	Sets the color of the general light that illuminates the entire scene. Ambient light has a uniform intensity and is uniformly diffuse. It has no discernible source and no discernible direction.

Function	Description
Default Material Diffuse Color	Sets the color of the diffuse light that is reflected in a scene. Because most scenes contain much more diffuse light than ambient light, diffuse reflection plays the largest part in determining the overall color. Additionally, because diffuse light is directional, the angle of incidence for diffuse light affects the overall intensity of the reflection. Diffuse reflection is at its greatest when the light strikes a vertex parallel to that vertex normal. As the angle of reflection increases, the effect of the diffuse reflection diminishes. The amount of light reflected is the cosine of the angle between the incoming light and the vertex normal. **i Note** Files may display differently in the viewport if you change the diffuse color material.
Default Material Specular Color	Sets the color that creates highlights on objects making them appear shiny, that is, the reflection.
Default Material Emissive Color	Sets the color that makes a rendered object appear self-luminous. Emission affects an object's color and can, for example, make a dark material brighter and take on part of the emitted color.
Faces in Line Illustration Mode	Sets the color of the faces in Line Illustration mode.
Selected Faces	Sets the color of selected faces.
Border of Selected Face	Sets the border color of selected faces.
Lines in Line Illustration Mode	Sets the color of the line when displaying a scene in Line Illustration and Hidden Wireframe modes.
Lines in Shaded Illustration Mode	Sets the color of the lines in Shaded Illustration and Solid Outline modes.
Lines in Wireframe Mode	Sets the color of the lines in the various Wireframe modes.
Selection Highlight	Sets the color of the selected object's highlights.
Solid Grid Light Cell	Sets the color of the lighter cells of the solid grid, or ‘floor’ of the scene.
Solid Grid Dark Cell	Sets the color of the darker cells of the solid grid.
Transparent Grid Light Cell	Sets the color of the lighter cells of the transparent grid.
Transparent Grid Dark Cell	Sets the color of the darker cells of the transparent grid.
Subdivision Control Mesh	Sets the color of the subdivision surface control mesh.
Surface Normals	Sets the color of surface normals.
Vertex-Cross Color	Sets the color of the crosses representing an object's vertices.
Vertices in Vertices mode	Sets the color of the vertices when displayed in Vertices mode.
Viewport Labels	Sets the color of the viewport labels.

Function	Description
Wire Grid	Sets the color of the lines of the wired grid, or 'floor'.
X Axis	Sets the color of the x-axis of the selected object and the world coordinate system, or 'axes'.
Y Axis	Sets the color of the y-axis of the selected object and the world coordinate system.
Z Axis	Sets the color of the z-axis of the selected object and the world coordinate system.
Cross Section Outline	Sets the color of the cross section plane's outline.
Cutting Plane	Sets the color of the cutting plane.
Non output size area	Sets the color for the area outside the output size area.
Output Size border and margin	Selects the color of the border and margin for the output size area.
Detailed View Border	Selects the color of the detailed view border.
Illustration Detailed View Border	Selects the color of the detailed view border when you are in illustration mode.
OK	Applies the settings and closes the window. Any changes made to the settings are saved.
Cancel	Closes the window. Any changes made to the settings are lost.
Help	Opens the Help manual.

Related Information

Printing Files [page 129]
Print Window [page 130]

3.9.3 Output Size Window

The *Output Size* window establishes the output settings for illustrations.

> **i Note**
>
> The *Output Size* window is not available when printing CGM files.

Function	Description
Preset	Selects a preset paper size for the scene. Select a standard size from the drop-down menu, or select *Custom*.

Function	Description

Output Size	Selects the resolution and output size to use.
	• *Width* - Determines the width of the printed scene.
	  ○ *Pixels* - Specify the width in pixels.
	  ○ *Centimeters* - Specify the width in centimeters.
	  ○ *Millimeters* - Specify the width in millimeters.
	  ○ *Inches* - Specify the width in inches.
	  ○ *Picas* - Specify the width in picas.
	  ○ *Points* - Specify the width in points.
	• *Height* - Determines the height of the printed scene.
	• *Resolution* - Determines the resolution of the image, or how many pixels are defined in the boundary of a square inch, when printing. This setting is expressed as pixels per inch (PPI). The higher the number, the greater the resolution.

Orientation	Selects an orientation when printing. • *Portrait* - Select to print with a portrait orientation. • *Landscape* - Select to print with a landscape orientation.
Margins (Millimeters)	Controls the margin settings. • *Left* - Select a left margin width in millimeters. • *Right* - Select a right margin width in millimeters. • *Top* - Select a top margin width in millimeters. • *Bottom* - Select a bottom margin width in millimeters.
OK	Saves the settings and closes the window without rendering the scene.
Cancel	Closes the window. Any changes made to the settings are lost.
Help	Opens the relevant Help topic.

Related Information

Printing Files [page 129]
Print Window [page 130]

4 Working with SAP 3D Visual Enterprise Viewer in Office

Use

You can also use the SAP 3D Visual Enterprise Viewer user interface within Microsoft Word and PowerPoint. The viewport, information panel, toolbars, and additional menu options constitute your platform for working with SAP 3D Visual Enterprise Viewer in Microsoft Office. User interface extensions in Microsoft Word and Powerpoint make it easy to embed 3D content into documents and presentations.

This topic provides you with some general functional information, which is designed to assist you where the functionality differs from that in the standalone SAP 3D Visual Enterprise Viewer. More detailed functional information is provided in other topics.

Features

You can insert 2D and 3D files into PowerPoint presentations and Word documents. Two modes are used to work with 2D images and 3D models once a file is inserted into a document:

- Image mode: Presents a 2D representation that can be moved and resized using controls. The scene tree and the toolbars are not displayed in image mode.
- Interactive mode: Presents a 3D representation that can be rotated, panned, scaled, or zoomed. The 3D viewport menus, information panel, 2D/3D Editor toolbars, and Animation toolbar, can be used to control scene settings, objects, materials, and animation.

For PowerPoint and Word, the file is inserted in the image mode with the 'active area' determined by 'controls'. The active area refers to the entire scene in both image and interactive modes.

When files are first inserted into PowerPoint or Word, you may need to resize the active area to display the entire scene tree. If you are using SAP 3D Visual Enterprise Author, CAD files should be saved as .rh files before being inserted or dragged into Office documents.

> **i** Note
>
> If you are using SAP 3D Visual Enterprise Access, you must ensure that the content is downloaded before inserting.

4.1 User Interface in Office

SAP 3D Visual Enterprise Viewer in Microsoft Office is displayed within a document when you insert a file into a document. You can view and display any 2D images and 3D scenes in the user interface in exactly the same way as you would were you using the standalone application.

The SAP 3D Visual Enterprise Viewer user interface has the following component parts:

- Menu options within the add-ins ribbon
- Viewport
- *Information* panel
- *2D/3D* editor toolbar
- *Animation* toolbar

The controls for using these functions are either available over the viewport, or are contained in the information panel and toolbars at the edges of the user interface.

The user interface within Microsoft Office has an additional menu, which is accessed from the add-ins ribbon in Microsoft Office applications.

Features

The following menu options are available from the SAP 3D Visual Enterprise add-in menu:

Menu Option	Functional Description
Insert 3D Model	Used to insert a 3D file, either from the *My 3D Models* folder that was created during the SAP 3D Visual Enterprise Viewer installation, or the folder of your choice
Insert 3D Model with Context	Used to insert a 3D file and perform linking from a context link
Insert SAP 3D Visual Enterprise Access Link	Used to insert an Internet shortcut to a SAP 3D Visual Enterprise Access file into the document
SAP 3D Visual Enterprise Viewer Help	Displays the application's User Reference (Online Help)
Support	Displays the website support page
About	Displays copyright and version information

In addition to the context menu options that can be found in the standalone Viewer application, Viewer in Office contains an additional *Background* context menu option, which allows you to set the Viewport's background to either *Transparent* or *Opaque*.

- The *Transparent* option makes the Viewport background transparent, so that any text or image that is located behind the inserted 3D model is visible.
- The *Opaque* option makes the Viewport background opaque. Any text or image behind the inserted 3D model will not be visible.

Both the *Transparent* and *Opaque* options are available in PowerPoint only. The Viewport in Word will always be set to have an opaque background.

> **i Note**
>
> The *Transparent* and *Opaque* background options are only available for Office 2007 and Office 2010. These background options are not available in Office 2013.

Activities

Setting the Viewport Background

You can set the Viewport background to transparent or opaque as follows:

1. Right-click on the Viewport.
2. Select *Preferences* > *Background*.
3. Select *Transparent* or *Opaque*, depending on your desired background setting. The option will have a check mark beside it to indicate that it has been selected.

4.2 Inserting Files in Microsoft Office

Use

You can insert 2D and 3D files into Microsoft Office Word or PowerPoint documents in two different ways:

- By using the *Insert 3D Model* SAP 3D Visual Enterprise Viewer menu command from the add-ins ribbon in the Microsoft Office document.
- By dragging a file from Windows Explorer or SAP 3D Visual Enterprise Author into an open Microsoft Office document.

Inserting files using the menu command gives you the option of linking, embedding, or linking and embedding the file. Dragging files links and embeds the file by default. The following insertion rules apply:

- Files cannot be inserted into text boxes in PowerPoint or Word.
- Only file types that are selected for drag and drop in the configuration settings can be dragged into PowerPoint or Word.
- Dragged 2D images are inserted as standard Windows images.
- You can insert multiple files in a PowerPoint presentation or Word document. However, you cannot insert more than one file into the same PowerPoint slide.

Once you have created files that include 2D or 3D content, you can edit scenes in Interactive mode using a variety of tools. These editing procedures are identical across all Visual Enterprise applications. Note that in Image mode, Windows conventions apply for editing images.

Activities

Inserting a File into an Office Document

1. Open a new or existing PowerPoint presentation, or Word document, and from the add-ins ribbon, choose *SAP 3D Visual Enterprise Viewer* > *Insert 3D Model*.
2. Select a file and perform one of the following:
   - Click *Link* to link the source file to the image/model in the destination document.
   - Click *Embed* to place a copy of the source file directly in the destination document.

- Click *Link and Embed* to link the source file to the image/model in the destination document.

3. Click *Open*.

Switching to Image Mode

Perform one of the following:

- If you are using Word, right-click over the scene and select *Image Mode* from the context menu.
- If you are using PowerPoint, double-click outside the active area.

Switching to Interactive Mode

Perform one of the following:

- Right-click over the image and select *Interactive Mode*.
- Right-click over the image and choose *SAP 3D Visual Enterprise Viewer Model Object* > *Edit* to switch to Interactive mode.
- Double-click inside the active area.

> **i Note**
>
> The option to switch to Interactive mode using double-click is not supported in PowerPoint 2013. The only supported method for switching to Interactive mode in PowerPoint 2013 is to right-click on the image, and choose *SAP 3D Visual Enterprise Viewer Model Object* > *Edit*.

4.3 Editing the Active Area

Use

After creating content, you can move and resize the active area. The active area refers to the entire scene. The active area is moved and resized when you are in image mode. Images are moved and resized within the document using the controls that appear when the image is selected. These procedures conform to the Windows conventions for moving and resizing images. In interactive mode, models are moved and resized within the scene.

> **i Note**
>
> You cannot move images within a Word document when they are displayed in the default *In line with text* text wrapping style. Refer to your Microsoft Word documentation for further information.

Activities

Moving the Active Area in Image Mode

Select the image and drag it to it to its new location in the document.

Resizing the Active Area in Image Mode

Position the mouse pointer over one of the sizing controls and drag the mouse away from or toward the center.

- To keep the center of an object in the same place, hold down `CTRL` while dragging the mouse.
- To maintain the object's proportions, hold down `SHIFT` while dragging the mouse.
- To maintain the proportions while keeping the center in the same place, hold down `CTRL` and `SHIFT` while dragging the mouse.

> **i** Note
>
> To resize ActiveX controls in MSWord, switch from *Reading* view to *Outline*, *Draft*, *Web*, or *Print* layout.

4.4 Deleting Files

Use

You can delete 2D and 3D files very simply. 3D files are deleted from documents in image mode. 2D files can be deleted as soon as they are selected within the document.

Activities

In the document, click the image to select it. If the file is 3D, move to image mode, and press `DELETE` on your keyboard. If the file is 2D, simply press `DELETE`.

The file is deleted.

4.5 Linking and Embedding Files

SAP 3D Visual Enterprise Viewer linking and embedding files is generally consistent with linking and embedding files within Microsoft Office applications. When a file is inserted as linked, it references a source file that resides outside of the document in which the file is inserted - the destination document.

- If the source file is modified, the changes are reflected in the destination document as long as the link is maintained. This is useful when file size is a consideration or when you want to include information that is maintained independently.
- If the link is broken, the image or model is not displayed in the destination document. Additionally, the original camera view of the model is displayed each time the document is opened.

> **i** Note
>
> When a file is inserted as a link type, the option for collaboration is not available.

Embedding option places a copy of the source file directly in the destination document. If the source file is modified, the file is not updated in the destination document. This is useful when you want to distribute a version of the document to people who do not have access to the independently maintained source file.

The *Link and Embed* option offers a combination of linking and embedding when inserting files into documents. The image or model is updated as the source file changes. If the link is broken, the file still displays in the destination document.

4.6 Inserting Internet Shortcuts using SAP 3D Visual Enterprise Viewer

Use

2D and 3D files can be inserted into Microsoft Office by inserting an Internet shortcut. An Internet shortcut references a source file that resides in SAP 3D Visual Enterprise Generator. The file in which the Internet shortcut is inserted is known as the destination document. When you insert an Internet shortcut into the destination document, either the image of the 2D source document or the model of the 3D source document is displayed.

Only certain files can be downloaded as an Internet shortcut. See the SAP 3D Visual Enterprise Access help reference for details. In addition, the following insertion rules apply:

- Dragging is unavailable in PowerPoint and Word.
- Linking, and linking and embedding is unavailable for Internet shortcuts to 2D content in PowerPoint.

Activities

Inserting an Internet Shortcut into an Office Document

1. Open a new or existing PowerPoint presentation, or Word document, and from the add-ins ribbon, choose *SAP 3D Visual Enterprise Viewer* > *Insert SAP 3D Visual Enterprise Access Link*.
2. Navigate to, and select the Internet shortcut to insert.
3. Perform one of the following:
   - Click *Link* to link the source file to the image or model in the destination document.
   - Click *Embed* to place a copy of the source file directly in the destination document.
   - Click *Link & Embed* to link the source file to the image or model in the destination document.
4. Click *Open*.

4.7 Updating Internet Shortcuts in Office

Use

Internet shortcuts are dynamic, in that they are linked to the most recent version of that file. Linking and embedding Internet shortcuts is generally consistent with linking and embedding files within Microsoft Office applications.

Linking

An Internet shortcut references a source file that resides outside of the document in which the file is inserted - the destination document.

If the source file is modified, the changes are reflected in the destination document as long as the link is maintained. This is useful when file size is a consideration or when you want to include information that is maintained independently.

If the link is broken, the image or model is not displayed in the destination document.

Embedding

Embedding places a copy of the Internet shortcut directly in the destination document. If the source file is modified, the content is not updated in the destination document. This is useful when you want to distribute a version of the document to people who don't have access to the independently maintained source file.

Linking and Embedding

The *Link and Embed* option offers a combination of linking and embedding when inserting an Internet shortcut into documents. If the link is broken, the image or model still displays in the destination document.

Activities

Updating Linked Internet Shortcuts

Open an existing PowerPoint presentation or Word document.

The images and models are automatically updated.

You can then save the document in the usual way for the application that you are using.

5 Electronic Design Automation

You can view the following types of models (drawings):

- 3D solid model
- ECAD 2D solid model:
  - PCB layout
  - Schematic

The following table describes ECAD file formats that are supported:

File Format	Type	Extension
A3P	Text	A3P
GenCAD	Text	CAD
GenCAM (IPC-2511)	Text	GCM
ODB++	Text	ODB
Offspring (IPC-2581)	Text	CVG

Fields

You can view ECAD images using the information panel and 2D/3D Editor toolbar in SAP 3D Visual Enterprise Viewer.

For ECAD models, the information panel comprises the following:

- Elements (see Elements [page 145])
- Schematic sheets (see Schematic Sheets [page 146])
- Layers
  For ECAD models, layers are used to group ECAD objects by model element type and by physical layering of the PCB. For example, there will typically be separate layers for the components on the top of the board and the components on the bottom of the board. The layers list is also used to control which layers are displayed. Flipping the board automatically adjusts which layers are displayed.

The following table describes fields shown in the 2D/3D editor toolbar for ECAD files:

Field	Description
ECAD Settings	Opens the *ECAD Settings* dialogue where you can do the following: • Define the color of the *World View* outline • Enable the selection of a component by clicking anywhere inside a component boundary line, including the component boundary line itself If this setting is disabled, then the component may only be selected by clicking on the component objects themselves, for example component boundary line, pads or label.
Page Layout	Visualizes how images in the SAP 3D Visual Enterprise Viewer user interface will appear on a printed page
Zoom Window	Provides a best fit of the image in the SAP 3D Visual Enterprise Viewer user interface, or zooms a selected section of the scene
Rotate 90° Clockwise	Rotates the vieweport image 90° clockwise
Rotate 90° Counter Clockwise	Rotates the vieweport image 90° counter clockwise
Flip Board	Alternates between viewing the ECAD model from the top or from the bottom
World View	Displays a rectangle representing the current viewport view superimposed on a small image of the entire ECAD model at the bottom of the information panel
Full Screen	Alternates between a full screen and a window-sized display

More Information

ECAD Model View [page 147]

ECAD Selections [page 146]

5.1 Elements

Use

The *Elements* window displays a list of all the elements that are associated with the current ECAD model. ECAD models can contain hundreds of elements. There are three element types:

- Components
- Routes
- Test points

You can use a filter to display only the elements of a specific type. For an element of the *Component* type, you can use search by `RefDes` or `DeviceRef`: choose *Device Reference* or *Reference Designator* from the *Search* dropdown menu and enter a search value.

More Information

Selection and Visibility of Elements [page 145]

5.1.1 Selection and Visibility of Elements

Using the selection and visibility functions, you can determine which elements are displayed in the viewport.

Selection of Elements

You can perform your element selections in one of the following ways:

- Click the element in the *Elements* list.
- Click the element directly in the ECAD viewport.

When an element is selected, a bounding box outlines the element in the viewport, the element is displayed in the selection color in the viewport and highlighted in the *Elements* list.

> **i Note**
>
> The bounding box visibility is an option in the *Settings* in the *Preferences* menu.

De-selection of Elements

You can deselect the objects in your selection in the following ways:

- Left-click anywhere in the viewport, except on the selected element.
- Left-click another item in the *Elements* list.
- Left-click another item in the viewport.

Element Visibility

To display or hide an element, select or deselect the checkbox next to the element name in the *Elements* list.

5.2 Schematic Sheets

The *Schematic Sheets* window displays a list of schematic sheets containing a specified component associated with the current ECAD model. Double-click a single listed sheet to view it in the viewport or double-click *PCB Layout* to view the board layout.

You can filter the *Schematic Sheets* list by using the following dropdown menu options:

- *All*
- *Contain Element*

You can check which sheets contain a specific component in the *Schematic Sheets* list in one of the following ways:

- Choose *Contain Element* and enter the identifier (`RefDes`) in the *Elements* field.
- Left-click a component in the ECAD viewport.

The names of the sheets that do not contain the element will be highlighted in red.

5.3 ECAD Selections

You can use this function to highlight specific elements in ECAD model. The way the elements are shown in the viewport depends on the user-specified selection settings, which are located in *Preferences* > *Settings*.

The following table describes fields requiring explanation:

> **i** Note
>
> This table describes only those fields that relate specifically to ECAD. Additional fields contained within the settings window do not apply, and therefore are not described here.

Field	Description
Highlight Selection	Highlights the selected object in a specific color
Flash Highlight	Used to toggle on and off flashing highlight of the selected element and to set the type of flashing: *Constant*: The highlighted element will flash continually. *Number*: The highlighted element will flash a specified number of times.
Number	Used to assign the number of animated flashes for the highlighted element. For example, the highlighted element will flash five times. Note that this field is not available if you have selected *Constant* as your flash highlight type.
Bounding Box	Used to toggle on and off the display of a bounding box around the selected object

5.4 ECAD Model View

Use

You can use this function to manipulate the displayed image to achieve the needed view of the model using the display control capabilities of SAP 3D Visual Enterprise Viewer. You can also filter the contents of the model and to display only those model elements that pass the filters.

The ECAD input file contains a PCB Layout model. This is a 2D model with layering. It may also include a schematic model.

Features

Manipulating ECAD PCB Layout View

SAP 3D Visual Enterprise Viewer provides the following ways in which to manipulate the *PCB Layout* image displayed in the viewport:

ECAD PCB Layout View

Functional Description	Activity
Pan the image in any direction	Depress the left mouse button (or the left and right mouse buttons), drag the cursor in any direction, and release the mouse buttons. For small incremental horizontal movements, hold down the `Left` or `Right` arrow keys.
Zoom the image around the starting cursor position	Position the cursor at the point about which to zoom, depress the right mouse button and drag the cursor vertically (up to zoom in and down to zoom out).
Switch to the *Best Fit* view	Choose  on the right side toolbar. If it is not visible, choose the drop-down control on the  icon).
Center and zoom specified area	Choose  on the right side toolbar; position the cursor at a corner of the area to be zoomed; depress the left mouse button and drag the cursor to the opposite corner of the area to be zoomed; release the mouse button. If the *Zoom Window* icon is not displayed, select the drop-down control on the *Best Fit* icon. If the *Zoom Window* icon is already displayed, selecting it will toggle it on or off.
Center and zoom an already selected element	Position the cursor in an empty area in the image; click the right mouse button; use the left mouse button to select the *Zoom to Active Object* entry in the context menu.
Center and zoom all visible elements	To center and zoom all visible model elements (best fit on visible elements), position the cursor in an empty area in the image; click the right mouse button; use the left mouse button to select the *Zoom Visible* entry in the context menu.
Center and zoom an element	Double-click on the element in the viewport or double-click on the element in the *Elements List*.

Filtering ECAD PCB Layout View

SAP 3D Visual Enterprise Viewer provides the following ways in which to filter the contents of the *PCB Layout* image displayed in the viewport:

ECAD PCB Layout View

Functional Description	Activity
Switch ECAD view modes	To switch to the *Schematic View* mode, choose the *Schematic Sheets* icon on the left hand toolbar; double-click on a schematic sheet entry. This will display the selected schematic sheet in the viewport with the label for the currently selected component centered and zoomed. A schematic sheets entry displayed in black contains the currently selected model component. A schematic sheets entry displayed in red does not contain the currently selected model component.
Layer control	To filter the contents of the model image by layers, choose the *Layers* icon on the left hand toolbar; select a checkbox to turn on the display of the contents of that layer; deselect a checkbox to turn off the display of the contents of that layer. To select or deselect all layers, select or deselect the *Select All* checkbox. Note that when not all layers are selected, the checkbox status is set to *Partially Selected*.
Flip the board	Flipping the board automatically filters the contents of the model image by turning off the display of the layers currently displayed and turning on only the layers associated with the other side of the board. It also rotates the viewpoint 180 degrees about a horizontal axis along the length of the board and halfway up the height of the board. To flip the board, choose the *Flip Board* icon. This will flip the board and toggle the state of the icon. When the icon is on, it indicates that the bottom of the board is being displayed. When the icon is off, it indicates that the top of the board is being displayed.
Select or deselect element checkbox	

Manipulating ECAD Schematic View

SAP 3D Visual Enterprise Viewer provides the following ways in which to manipulate the *Schematic* image displayed in the viewport:

ECAD Schematic View

Functional Description	Activity
Pan the image in any direction	Depress the left mouse button (or the left and right mouse buttons), drag the cursor in any direction, and release the mouse buttons. For small incremental horizontal movements, hold down the `Left` or `Right` arrow keys.

Functional Description	Activity
Rotate the viewport image 90° clockwise or 90° counter clockwise	Choose  or  on the right side toolbar. The World View is matched automatically.
Zoom the image around the starting cursor position	Position the cursor at the point about which to zoom, depress the right mouse button and drag the cursor vertically (up to zoom in and down to zoom out).
Switch to the *Best Fit* view	Choose  on the right side toolbar. If it is not visible, choose the drop-down control on the  icon).
Center and zoom specified area	Choose  on the right side toolbar; position the cursor at a corner of the area to be zoomed; depress the left mouse button and drag the cursor to the opposite corner of the area to be zoomed; release the mouse button. If the *Zoom Window* icon is not displayed, select the drop-down control on the *Best Fit* icon. If the *Zoom Window* icon is already displayed, selecting it will toggle it on or off.
Center and zoom an already selected component label	Position the cursor in an empty area in the image; click the right mouse button; use the left mouse button to choose the *Zoom to Active Object* entry in the context menu.
Center and zoom all visible	To center and zoom all visible schematic elements (best fit on visible elements), position the cursor in an empty area in the image; click the right mouse button; use the left mouse button to choose the *Zoom Visible* entry in the context menu.
Center and zoom a component label	Double-click on the component label in the viewport or double-click on the component in the *Elements List*.

Filtering ECAD Schematic View

SAP 3D Visual Enterprise Viewer provides the following ways in which to filter the contents of the schematic sheet image displayed in the viewport:

ECAD Schematic View

Functional Description	Activity
Switch ECAD view modes	To switch to the *PCB Layout View* mode, choose the *Schematic Sheets* icon on the left-hand toolbar; double-click on the *PCB Layout* entry. This will display the *PCB Layout* view with the selected component centered and zoomed.
Switch schematic sheets	To display a different schematic sheet, choose the *Schematic Sheets* icon on the left-hand toolbar; double-click on the schematic sheet entry. This will display the selected schematic sheet in the viewport with the label for the currently selected component centered and zoomed. A schematic sheets entry displayed in black contains the currently selected model component. A schematic sheets entry displayed in red does not contain the currently selected model component.

Important Disclaimers and Legal Information

Hyperlinks

Some links are classified by an icon and/or a mouseover text. These links provide additional information.
About the icons:

- Links with the icon : You are entering a Web site that is not hosted by SAP. By using such links, you agree (unless expressly stated otherwise in your agreements with SAP) to this:
  - The content of the linked-to site is not SAP documentation. You may not infer any product claims against SAP based on this information.
  - SAP does not agree or disagree with the content on the linked-to site, nor does SAP warrant the availability and correctness. SAP shall not be liable for any damages caused by the use of such content unless damages have been caused by SAP's gross negligence or willful misconduct.
- Links with the icon : You are leaving the documentation for that particular SAP product or service and are entering a SAP-hosted Web site. By using such links, you agree that (unless expressly stated otherwise in your agreements with SAP) you may not infer any product claims against SAP based on this information.

Beta and Other Experimental Features

Experimental features are not part of the officially delivered scope that SAP guarantees for future releases. This means that experimental features may be changed by SAP at any time for any reason without notice. Experimental features are not for productive use. You may not demonstrate, test, examine, evaluate or otherwise use the experimental features in a live operating environment or with data that has not been sufficiently backed up.
The purpose of experimental features is to get feedback early on, allowing customers and partners to influence the future product accordingly. By providing your feedback (e.g. in the SAP Community), you accept that intellectual property rights of the contributions or derivative works shall remain the exclusive property of SAP.

Example Code

Any software coding and/or code snippets are examples. They are not for productive use. The example code is only intended to better explain and visualize the syntax and phrasing rules. SAP does not warrant the correctness and completeness of the example code. SAP shall not be liable for errors or damages caused by the use of example code unless damages have been caused by SAP's gross negligence or willful misconduct.

Gender-Related Language

We try not to use gender-specific word forms and formulations. As appropriate for context and readability, SAP may use masculine word forms to refer to all genders.

Videos Hosted on External Platforms

Some videos may point to third-party video hosting platforms. SAP cannot guarantee the future availability of videos stored on these platforms. Furthermore, any advertisements or other content hosted on these platforms (for example, suggested videos or by navigating to other videos hosted on the same site), are not within the control or responsibility of SAP.

www.sap.com/contactsap

© 2020 SAP SE or an SAP affiliate company. All rights reserved.

No part of this publication may be reproduced or transmitted in any form or for any purpose without the express permission of SAP SE or an SAP affiliate company. The information contained herein may be changed without prior notice.

Some software products marketed by SAP SE and its distributors contain proprietary software components of other software vendors. National product specifications may vary.

These materials are provided by SAP SE or an SAP affiliate company for informational purposes only, without representation or warranty of any kind, and SAP or its affiliated companies shall not be liable for errors or omissions with respect to the materials. The only warranties for SAP or SAP affiliate company products and services are those that are set forth in the express warranty statements accompanying such products and services, if any. Nothing herein should be construed as constituting an additional warranty.

SAP and other SAP products and services mentioned herein as well as their respective logos are trademarks or registered trademarks of SAP SE (or an SAP affiliate company) in Germany and other countries. All other product and service names mentioned are the trademarks of their respective companies.

Please see https://www.sap.com/about/legal/trademark.html for additional trademark information and notices.

THE BEST RUN SAP