# Object Networking (PM-EQM-ON)

HELP.PMEQMON

**Release 4.6B**

SAP™

# Copyright

© Copyright 2000 SAP AG. All rights reserved.

No part of this brochure may be reproduced or transmitted in any form or for any purpose without the express permission of SAP AG. The information contained herein may be changed without prior notice.

Some software products marketed by SAP AG and its distributors contain proprietary software components of other software vendors.

Microsoft®, WINDOWS®, NT®, EXCEL®, Word® and SQL Server® are registered trademarks of Microsoft Corporation.

IBM®, DB2®, OS/2®, DB2/6000®, Parallel Sysplex®, MVS/ESA®, RS/6000®, AIX®, S/390®, AS/400®, OS/390®, and OS/400® are registered trademarks of IBM Corporation.

ORACLE® is a registered trademark of ORACLE Corporation, California, USA.

INFORMIX®-OnLine for SAP and Informix® Dynamic Server™ are registered trademarks of Informix Software Incorporated.

UNIX®, X/Open®, OSF/1®, and Motif® are registered trademarks of The Open Group.

HTML, DHTML, XML, XHTML are trademarks or registered trademarks of W3C®, World Wide Web Consortium, Laboratory for Computer Science NE43-358, Massachusetts Institute of Technology, 545 Technology Square, Cambridge, MA 02139.

JAVA® is a registered trademark of Sun Microsystems, Inc. , 901 San Antonio Road, Palo Alto, CA 94303 USA.

JAVASCRIPT® is a registered trademark of Sun Microsystems, Inc., used under license for technology invented and implemented by Netscape.

SAP, SAP Logo, mySAP.com, mySAP.com Marketplace, mySAP.com Workplace, mySAP.com Business Scenarios, mySAP.com Application Hosting, WebFlow, R/2, R/3, RIVA, ABAP, SAP Business Workflow, SAP EarlyWatch, SAP ArchiveLink, BAPI, SAPPHIRE, Management Cockpit, SEM, are trademarks or registered trademarks of SAP AG in Germany and in several other countries all over the world. All other products mentioned are trademarks or registered trademarks of their respective companies.

# Icons

| Icon | Meaning |
|---|---|
| | Caution |
| | Example |
| | Note |
| | Recommendation |
| | Syntax |
| | Tip |

# Contents

**Object Networking (PM-EQM-ON) ..... 5**
**Types of Object Link ..... 6**
**Object Link Master Record ..... 8**
**Creating an Object Link ..... 10**
**Creating a Link in the Graphic ..... 12**
**Creating Nodes in the Graphic ..... 13**
**Changing an Object Link ..... 14**
**Calling up Change Documents ..... 15**
**Displaying an Object Link ..... 16**
**Selection of Object Links ..... 17**
**Selecting an Object Link ..... 18**
**Evaluation of Object Links ..... 20**
**Example: Technical System as the Basis for Evaluations ..... 22**
**Object Network Display with Network Breakdown and Branch Display ..... 23**
Displaying Object Network as a Graphic ..... 24
Example: Object Network as a Graphic ..... 25
Displaying the Object Network in List Form ..... 26
Example: Object Network in List Form ..... 27
**Evaluation of Particular Types of Link ..... 28**
Displaying Particular Types of Link as a Graphic ..... 29
Example: Types of Link as a Graphic ..... 30
Displaying Particular Types of Link in List Form ..... 31
**Evaluation of Linked and Link Objects ..... 32**
Generating a List of Linked Objects ..... 33
Generating a List of Link Objects ..... 34

Object Networking (PM-EQM-ON)

# Object Networking (PM-EQM-ON)

## Purpose

The *Plant Maintenance (PM)* application component provides functions with which you can represent the links that exist between various technical objects or systems (pieces of equipment or functional locations). Such links exist, for example, between production units alone, between production systems and supply systems and between supply and disposal systems. You represent an object network using the object links. You can therefore structure your technical systems horizontally.

## Implementation Considerations

The following are reasons for using object links:

- You want to see the connections between various objects, in order to be able to recognize possible causes in predefined object systems when analyzing malfunctions.
- You want to be able to see at all times the objects which supply another object, so that you know when planning a maintenance task which particular supply systems might have to be shut down.
- You want to be able to see at all times the objects which supply another object, so that you know when planning a maintenance task which particular objects will be affected when a system is shut down.

## Integration

In addition to horizontal structuring using object networks, the PM application component also provides structuring options that allow the user to structure technical systems vertically, in other words, hierarchically. Horizontal and vertical structuring options can be combined.

PM provides the following options for structuring technical systems hierarchically:

- Functional structuring in functional locations
- Object-related structuring in pieces of equipment
- Technical structuring according to particular object classes

For more information on hierarchic structuring types, see Technical Objects (Structuring of Technical Systems) [Ext.].

# Types of Object Link

You can represent the following types of links between technical objects (pieces of equipment, functional locations):

## Definition: One-Way Links

A one-way link is one in which a medium, transferred by means of the link between one object and another, is always supplied in the same direction.

Pump A, Pump B and Pump C are linked with each other by means of water pipes. The water is always pumped from Pump A to Pump B and from Pump B to Pump C. The link is therefore one-way.

## Definition: Two-Way Links

A two-way link is one in which a medium, transferred by means of a link between one object and another, is sometimes supplied in one direction and sometimes supplied in the other.

Host A and Host B are connected to each other by a cable. Information flows from both Host A to Host B and from Host B to Host A. This link is therfore two-way.

## Definition: Simple Links

A simple link is one in which two objects are connected by means of a single link object.

Pump A and Pump B are linked with each other by means of a pipe. The pipe represents the simple link.

## Definition: Parallel Links

A parallel link is one in which two objects are connected by means of several link objects.

Host A and Host B are linked with each other by means of three cables. The cables represent the parallel link.

## Definition: Inward Links

Links that lead to a technical object, connecting it with the medium supplied, are described as inward links.

Production Area A is supplied with raw materials from Functional Location Y and Functional Location Z by means of a conveyor belt in each case. The conveyor belts represent the inward links of Production Area A.

## Definition: Outward Links

The links that lead from a technical object, transporting the medium to other objects, are described as outward links.

A clarification plant has an inlet pumping station, from which a pump for mechanical cleaning is driven and from which a slope conveyor leads to the waste container. The pump and the conveyor are the outward links of the pumping station.

## Definition: Object Networks

An object network consists of several links that share a common characterizing mark. Object networks are formed when different objects are linked with one another.

The water pipes in a large building are summarized in the object networks “Drinking water” and “Central heating”.

# Object Link Master Record

## Definition

Object links are stored and managed in the *Plant Maintenance (PM)* application component in an object link master record, by means of a unique number.

## Use

You can use PM object links to represent the dependencies between particular technical objects (pieces of equipment, functional locations). Knowledge of these dependencies is important above all for electric, gas and water companies as well as the chemical industry. However, the management of PM object links also has many advantages for companies with many production lines or computer network operators connected to one another.

If you want to manage the link itself as a piece of equipment or a functional location, a master record must also exist for it.

## Structure

All the essential data of an object link is shown in a single screen in the object link master record. This screen is structured in the same way for links between functional locations and for links between pieces of equipment. It consists of three blocks of data:

- Data about the object link

  This block contains the number and the description of the link and the ID of the network to which the link belongs.

- Data about the link and linked objects

  This block contains the numbers and the descriptions of the objects that are linked (= nodes), and possibly also the number and the description of the object that represents the link.

  However, it is not necessary to manage the link object (for example, the pipe or the cable) as a functional location or piece of equipment in the PM System. The link between two technical objects is identified by the link number. You only need to specify that technical object A is linked to technical object B; you do not need to say what links the two objects.

- Link description data

  This block contains the details of the validity of the link, the medium that flows through the link, and the relation between the linked objects.

## Integration

You can represent links between the following objects:

- From one functional location to another functional location
- From one piece of equipment to another piece of equipment

You cannot form links between different object types, for example, between a piece of equipment and a functional location.

You can enter the following information for each object link:

- Multilingual texts
- Data for classifying the object link
- Document data from the document management system

# Creating an Object Link

## Prerequisites

Before you start to create links between technical objects, you should be familiar with the overall structure of the area to which these objects belong. Only then will you be able to create links that have been carefully thought out, thus avoiding the need for subsequent, time-consuming changes that could have far-reaching effects.

## Procedure

1. Choose *Logistics* → *Plant maintenance* → *Technical objects*.

   You reach the *Technical Objects* screen.

2. Then choose either *FunctLocation* → *Object link* → *Create* or *Equipment* → *Object link* → *Create*.

   You reach the *Create Object Link* initial screen.

3. If your company has specified external number assignment for object links, enter the number with which the link should be managed. Note any rules which may apply specifically to your company.

   If your company has specified internal number assignment for object links, do not enter a number. The system will assign a number automatically when you save the link, and a message will inform you of the number.

4. Press *Enter* to reach the screen *Create Object Link:<Technical object>.*

5. In the first section of the screen, enter a short text that describes the link. If the link belongs to an object network that you want to keep separate from another object network, enter the network number as well.

6. In the second section of the screen, enter the two functional locations or pieces of equipment between which the link exists. If both objects are linked by an object that is managed in the system as a functional location or piece of equipment, enter the number of the object as well.

   Note that the entries in the fields *Link from* and *Link to* only indicate that a link exists between the two specified objects. The order in which you enter the objects does not determine the direction in which the medium is transferred. This is determined when you enter the type of relation used in the third section of the screen.

7. In the third section, enter the data that describes the link in greater detail.

8. If you want to enter the short text and long text in other languages, choose *Goto* → *Multilingual texts*. Enter the required data.

   For more information about SAP word processing, see *BC - Basis-Services/Communication, SAPscript: Word Processing in the SAPscript Editor*.

9. If you want to classify the links according to technical characteristics, choose *Classification*. Enter the required data.

   For more information about SAP classification, see The Classification System [Ext.].

10. If you want to enter documents for the link, choose → *Documents.* Enter the required data.

    For more information about SAP document management, see CA - Document Management [Ext.].

11. Save the master record.

    The system informs you that the new object link has been created. In the case of internal number assignment, the system displays the number under which the link was saved.

# Creating a Link in the Graphic

If you are in the graphic mode and notice that certain objects are not linked with each other, you can add these links directly in the graphic.

## Prerequisites

The system requirements for graphic display must be fulfilled at your workstation.

For more information about the graphic, see *BC - SAP Graphics: User's Guide*.

## Procedure

1. Generate a list of object links in the change mode using the selection function (see Selecting an Object Link [Page 18]).
2. Select the object links to be included in the evaluation.
3. Select the desired display under *Extras* → *Network* → *graphic*.

   The system now creates a graphic containing all required object links in the object network.
4. To link two objects, choose *Edit* → *Link.*

   The cursor appears as a pencil.
5. Place the pencil on the object you want to link. Click the left mouse button and drag the pencil to the object with which the first one is to be linked.

   A linking line appears.
6. Release the mouse button when the linking line reaches the second object.

   The link is created.
7. Double-click on the link to call up the screen *Create Object Link: <Technical object>*. Make the necessary entries and then save the link.

   You return to the graphic.
8. Choose *Graphic* → *Exit* to return to the list.

# Creating Nodes in the Graphic

If you are in the graphic mode and notice that certain objects are not yet contained as linked objects, you can add those nodes directly in the graphic.

## Prerequisites

The system requirements for graphic display must be fulfilled at your workstation.

For more information about the graphic, see *BC - SAP Graphics: User's Guide*.

## Procedure

1. Generate a list of object links using the selection function (see Selecting an Object Link [Page 18]).
2. Select the object links to be included in the evaluation.
3. Select the desired display under *Extras* → *Network* → *graphic*.

   The system now creates a graphic containing all required object links in the object network.
4. To create a new node, choose *Edit* → *Insert.*

   An empty node field appears in the navigation area.
5. Place this node field in the display area.
6. Insert the link from this node to another node.

   The system automatically copies the data of the other node to the initial screen for the link. You only need to add the second functional location or the second piece of equipment in the link master record.
7. Once you have saved the link master record, you return to the graphic.

   There you can see the link and node identifications.

# Changing an Object Link

You can change all the data for a selected object link by using the function *Change object link.* However, note that any changes can have far-reaching effects if the object link is already being used actively.

## Procedure

1. Choose *Logistics* → *Plant maintenance* → *Technical objects*.

   You reach the *Technical Objects* screen.

2. Choose either *FunctLocation* → *Object link* → *Change* or *Equipment* → *Object link* → *Change*.

   You reach the *Change Object Link* initial screen.

3. Enter the number of the object link.

   If you do not know the number of the object link that you want to process, you can use a selection function. This function is described in Selection of Object Links [Page 17].

4. Choose *Continue*.

   The screen *Change Object Link: <Technical object>* is displayed.

5. Change any link data that is incorrect or make any necessary additions. Proceed as described in Creating an Object Link [Page 10].

6. You can see the following:

   – The administrative information, telling you who created the master record, who last changed it and when

   – The previous automatically created change documents, documenting which changes have previously been made in the master record (see Calling Up Change Documents [Page 15]).

7. Save your changes.

# Calling up Change Documents

## Prerequisites

Your system administration has activated the creation of change documents in the Customizing function for object links.

## Procedure

1. In the screen *Change Object Link: <Technical object>* choose *Environment* → *Display changes*.

   You reach the screen *Change documents for Object Class VINET*. This shows a list of the documents in which the changes are documented.

2. Call up the required documents by flagging them and choose *Display documents*.
3. Choose *Back* to return to the *Change Object Link: <Technical object>* screen.

# Displaying an Object Link

1. Choose *Logistics* → *Plant maintenance* → *Technical objects*.

   You reach the *Technical Objects* screen.

2. Then choose either *FunctLocation* → *Object link* → *Display* or *Equipment* → *Object link* → *Display*.

   The screen *Display Object Link: Initial* is displayed.

3. Enter the number of the object link.

   If you do not know the number of the object link that you want to process, you can use a selection function. This function is described in Selection of Object Links [Page 17].

4. Choose *Continue*.

   The screen *Display Object Link: <Technical object>* is displayed. Here you can see all current object link data.

5. You can call up the following data from this screen:

   – The administrative information, telling you who created the master record, who last changed it and when

   – The previous automatically created change documents, documenting which changes have previously been made in the master record (see Calling up Change Documents [Page 15]).

# Selection of Object Links

## Use

The selection function for object links is supported for the following reasons:

- You might want to change or display a particular object link, but you do not know the number.
- You might want to change or display several object links that share particular characteristics.

## Integration

The system provides a list of the object links that satisfy your search criteria.

You can process the list according to your requirements. For more information, see Working with Lists [Ext.].

You can use the list to continue processing as follows:

- You can select one or more links to change or display.
- You can call up the graphical representation of the links.
- You can evaluate the object networks on the basis of the list.

## Activities

1. In the selection function, specify certain criteria according to which the system is to search for the object links. You can enter as many criteria as you want. The more you enter, the more precise the search will be and the shorter the list created (see Selecting an Object Link [Page 18]).
2. The system performs a search of all existing object links, according to the criteria you have specified.

# Selecting an Object Link

1. Choose *Logistics* → *Plant Maintenance* → *Technical objects*.

   You reach the *Technical Objects* screen.

2. Depending on the object type, select one of the following options:
   *Functional location* → *Object link* → *Object network*
   *Equipment* → *Object link* → *Object network*

   If you just want to **change** the selected object links, choose *Change*.
   If you just want to **display** the selected object links, choose *Display*.

   You reach the screen *<Display/Change>Object Network: Selection FL Links* or the screen *<Display/Change>Object Network: Selection EQ Links.*

3. Enter in the fields available the criteria according to which the system is to search for the object links.
4. Enter the selection options.
5. Enter the value sets.
6. When you have made all the necessary settings, the system can perform the selection:

| **If you want to...** | **then...** |
|---|---|
| view the list on the screen | execute the program.<br>You reach the *<Change/Display>Object Network: List <Object>-Links* screen. |
| print out the list | choose *Program* → *Execute and print.*<br>You reach the *Print List Output* screen.<br>Make all the necessary entries and print the list. |

   The selection list contains all the object links that correspond to the criteria that you specified.

7. To select a particular link from the list, select the object link and choose one of the following options:

   - *Goto* → *<Change/Display> link*

     You reach the object link data screen.

   - *Goto* → *Create notification* → *<Notification type>*

     You reach the screen where you can create a maintenance notification for the link. If a link object is entered for the selected link, the system automatically uses it as a reference object for the notification.

   - *Goto* → *Create order*

     You reach the screen where you can create a maintenance order for the link. If a link object has been entered for the selected link, the system automatically uses it as a reference object for the order.

8. Make all the required entries:
   - If you want to change link data, see Changing an Object Link [Page 14].
   - If you want to create maintenance notifications, see Processing of Maintenance Notifications [Ext.].
   - If you want to create maintenance orders, see Creation of a Maintenance Order [Ext.].
9. Save your changes. You return to the list.

# Evaluation of Object Links

## Purpose

The purpose of creating and managing object links in the *Plant Maintenance (PM)* application component is to provide a basis for the analysis of object networks in your company. The system can then answer specific questions, based on the data stored for the object links. For example, you might want to know:

- Which object links are already defined in the system for a particular technical object, period of time or medium?
- Which technical objects are linked to other objects?
- Which link objects exist in your company?
- Which inward, outward or parallel links exist?

In this example, the system represents a clarification plant. The following graphic shows how it is divided into functional locations and how the individual functional locations are linked to one another:

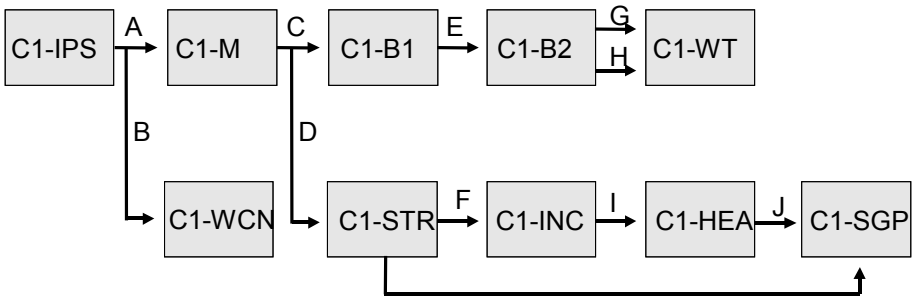


Legend:

| Functional Locations | |
|---|---|
| C1-IPS | Supply pump |
| C1-M | Mechanical purification |
| C1-B1 | 1. biological purification |
| C1-B2 | 2. biological purification |
| C1-WT | Clarified water test basin |
| C1-WCN | Waste container |
| C1-STR | Sewage treatment |
| C1-INC | Incineration |
| C1-HEA | Heating installation |
| C1-SGP | Sewage gas utilization |

| Links | |
|---|---|
| A | Shared conveyor belt |
| B | Shared conveyor belt |
| C | Bio-channel 1 |
| D | Sewage conveyor |
| E | Bio-channel 2 |
| F | Spiral pump |
| G | Clarified water pump 1 |
| H | Clarified water pump 2 |
| I | Hot water |
| J | Hot water |

## Prerequisites

The object links that you want to evaluate must be stored in master records in the system.

For evaluation, you must have authorization to either display or change object links.

## Process Flow

1. You must always create a list of object links using the selection function [Page 17], to serve as a basis for the evaluation of object links and object networks.
2. If the purpose of your evaluation is simply to see a list of particular object links, you need only use the selection function to create this list.
3. To perform more complex evaluations of object links, use the special analysis and graphics functions from the list.
4. Depending on which analysis option you have chosen, the system displays either an alphanumerically sorted list, a graphic with the objects, the object network or a network branch in a particular form.

The evaluations for links between functional locations and between pieces of equipment are identical. The following section only refers to functional locations. However, you should use the same procedure for pieces of equipment.

This section only describes the evaluation functions available when in the display mode. The evaluation functions available in the change mode are largely identical and for this reason they are not described.

# Example: Technical System as the Basis for Evaluations

The evaluation options available in the standard version of the *Plant Maintenance (PM)* application component are described with reference to a model system.

The system represents a clarification plant. The following graphic shows how it is divided into functional locations and how the individual functional locations are linked to one another:

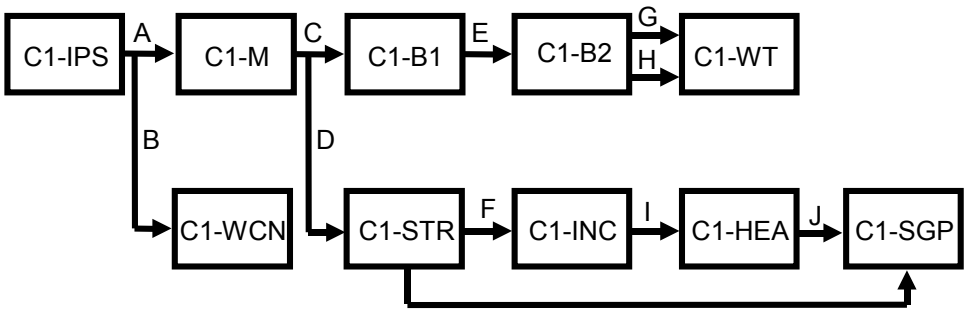


**Legend:**

| Functional locations | |
|---|---|
| C1-IPS | Inlet pumping |
| C1-M | Mechanical |
| C1-B1 | Biological purification |
| C1-B2 | Biological purification |
| C1-WT | Water testing pool |
| C1-WCN | Waste container |
| C1-STR | Sewage |
| C1-INC | Incineration |
| C1-HEA | Heating system |
| C1-SGP | Sewage gas |

| Links | |
|---|---|
| A | Shared conveyor |
| B | Shared conveyor |
| C | Sewage channel |
| D | Sewage conveyor |
| E | Sewage channel |
| F | Spiral pumps |
| G | Clarified water pipe |
| H | Clarified water pipe |
| I | Warm water |
| J | Warm water |

# Object Network Display with Network Breakdown and Branch Display

## Use

From the list of object linkks, you can display the object network in which a particular link is to be found as a network. You have two options for this:

- As a graphic

  The technical objects and links from the list are represented in the graphic as they are arranged in the network.

- As a list

  In the network list, the list of object links is sorted in such a way that the links are shown in the order that they are arranged in the network.

## Features

The graphic/list only contains the links that are found in the list that was created according to your selection criteria. For example, If you narrowed down the selection according to nodes, or link objects, all the objects in the network graphic from which the network can be exploded further are shown shaded:

1. You can display the whole network to which the selected link belongs.

   You obtain a graphic/list that contains all links in the entire network, **independent** of the list of selected object links.

2. You can display a particular branch of the network.

   You obtain a graphic/list with all the links in the direction of the network that has not yet been exploded. **All** the connected links are displayed, **independent** of the list of selected object links.

   When you perform this step, the system only takes into account the criteria *Network ID* and *Medium* that you entered as selection criteria for the basic list; any other criteria for the basic list are ignored. This means: If you want to see the links for the medium “drinking water” in a network and explode a branch that also contains links for the water for the central heating, the heating water links will not be displayed.

# Displaying Object Network as a Graphic

1. Generate a list of object links using the selection function [Page 17].
2. Select the object link that you want to display in the object network.
3. Choose *Extras* → *Network -> Graphic* → *Network*.

   The system creates a graphic of all the links that belong to the network containing the selected link.
4. If you want to explode the network further, select a shaded object.
5. You now have two options:

   a) If you want to display the whole network to which the selected link belongs, choose *Extras* → *Explode network* → *Network*.

      You obtain a graphic that contains all the links in the entire network, **independent** of the basic list.

   b) If you want to display a particular branch of the network, choose *Extras* → *Explode network* → *Network branch.*

      You obtain a graphic with all the links in the direction of the network that has not yet been exploded. **All** the connected links are displayed, **independent** of the basic list.

Example: Object Network as a Graphic [Page 25]

When you call up the graphic, the number and description of the link (also referred to as a "**link**" in the graphic) are always displayed by the standard system. The link text and the link number are therefore the ID of the link under which they are stored.
If a link is managed in the system as a piece of equipment or functional location, you might prefer to see the number and description of the technical object in the graphic instead of those of the link. For this reason, there is a function *Link description* in the graphic under *Extras*, that allows you to switch the link identification.

# Example: Object Network as a Graphic

You have narrowed down your selection for the list by entering the functional location C1-M (mechanical purification). After calling up the network (step 3), it is displayed with the following links:

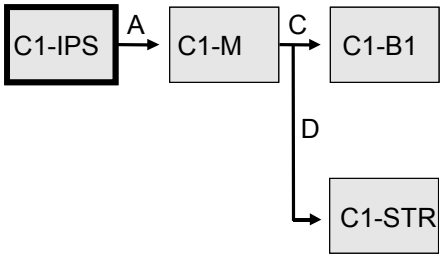


The descriptions of the functional locations and links can be found in Evaluation of Object Links [Page 20].

After exploding the network, (step 5, option a) it is displayed as follows:

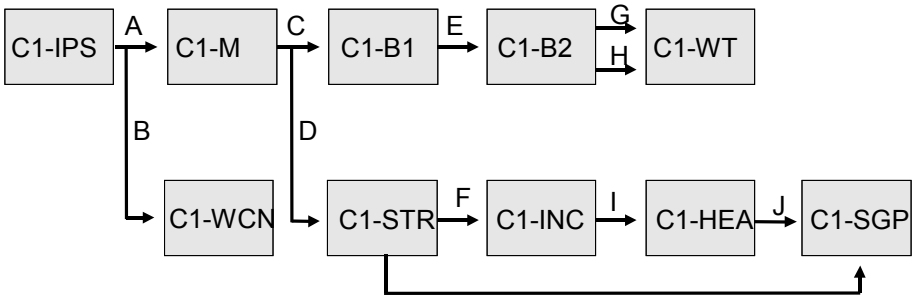


After exploding the network branch, (step 5, option b) it is displayed as follows:

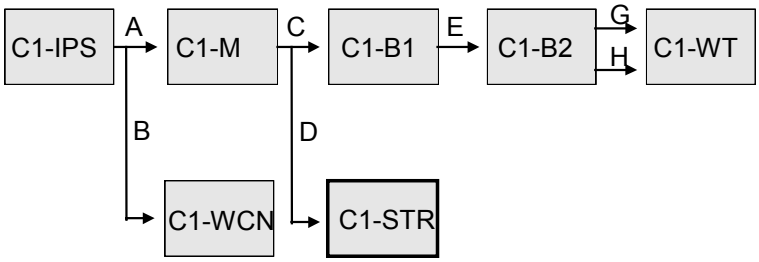

# Displaying the Object Network in List Form

1. Generate a list of object links using the selection function [Page 17].
2. Select the object link that you want to display in the object network.
3. Choose *Extras* → *Network -> List* → *Network*.

   The system creates a list of all the links that belong to the network containing the selected link.
4. If you want to explode the network further, select a link which has an arrow displayed.
5. You now have two options:

   a) If you want to display the whole network to which the selected link belongs, choose *Extras* → *Explode network* → *Network*.

      You obtain a graphic that contains all the links in the entire network, **independent** of the list of selected object links.

   b) If you want to display a particular branch of the network, choose *Extras* → *Explode network* → *Network branch.*

      You then obtain a graphic of all the links in the direction of the network that has not yet been exploded. **All** the connected links are displayed, **independent** of the list of selected object links.

Example: Object Network in List Form [Page 27]

# Example: Object Network in List Form

You have narrowed down your selection by entering the functional location C1-M (mechanical purification). After calling up the network (step 3), it is displayed as a list with the following links:

- Sewage conveyor between C1-M and C1-STR
- Shared conveyor belt between C1-IPS and C1-M
- Bio-channel 1 between C1-M and C1-B1

The system displays an arrow for all links, indicating that the network can be exploded further at each one. If you select "Bio-channel 1" between C1-M and C1-B1; you can explode the network further:

1. If you select this link and explode the network with *Extras* → *Explode network* → *Network*, (step 5, a), the system displays the links of the whole clarification plant network.
2. If you select this link and explode the network branch, (step 5, b), the system displays the network branch to C1-B2 and C1-WT in addition to the network from step 3.

# Evaluation of Particular Types of Link

## Use

You can display an object network as a graphic in such a way that only a particular type of link is shown, for example, inward or outward links only. This evaluation is based on the same principle as the evaluation of an object network in graphical or list form.

The graphic/list only contains the links that are found in the list that was created according to your selection criteria. For example, if you narrowed down the selection according to nodes, or link objects, all the objects in the graphic/list from which the network can be exploded further are shown shaded.

You create the graphic/list for inward links, the graphic for the combined display of inward and outward links and the graphic for parallel links using the menu options provided, in the same way as you would create the graphic/list for outward links, as described here in the example.

If you want to display the parallel links for a shaded link, the selected link is always displayed as well. If the selected link has no parallel links, the graphic contains only the selected link.

# Displaying Particular Types of Link as a Graphic

1. Generate a list of object links using the selection function [Page 17].
2. Select the object link for which you want to display, for example, all outward object links.
3. Choose *Extras* → *Network -> Graphic* → *Outward link*.

   The system now creates a graphic of all outward links that belong to the network in which the selected link is found. However, the graphic contains only the links that are found in the basic list that was created according to your selection criteria.
4. If you want to explode the network further, select a shaded object.
5. You can now display either the entire network or the network branch (see Object Network Display with Network Breakdown and Branch Display [Page 23]).

   Example: Types of Link as a Graphic [Page 30]

# Example: Types of Link as a Graphic

The link “Bio-channel 1” was flagged in the list of selected object links. To view all the outward links from "Bio-channel 1" in a graphic, choose

*Extras* → *Network -> Graphic* → *Outward link*.

You obtain the following graphic:

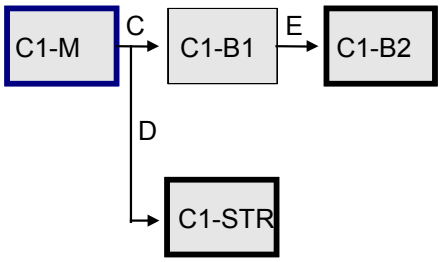


You can now explode the network further from the shaded objects.

The descriptions of the functional locations and links can be found in Evaluation of Object Links [Page 20].

# Displaying Particular Types of Link in List Form

1. Generate a list of object links using the selection function [Page 17].
2. Select the object link for which you want to display, for example, all outward object links.
3. Choose *Extras* → *Network* → *List* → *Outward link*.

   The system now creates a list of all object links going from the selected link.

   If you narrowed down the selection, arrows are displayed where the network can be exploded further in the list of selected object links.
4. If you want to explode the network further, select one of these lines.
5. You can now display either the entire network or the network branch (see Object Network Display with Network Breakdown and Branch Display [Page 23]).

   The link “Bio-channel” is selected in the list of selected links. The list of outward links contains the following links:

- "Bio-channel 2"
- "Sewage conveyor"

# Evaluation of Linked and Link Objects

## Use

The system only supports the list form and not graphics when evaluating linked and linking objects.

The technical objects that are linked to other technical objects, are referred to as “nodes”. You can create a list of these nodes within an object network. This list enables you to call up the master data of the linked objects, as well as data from, for example, the assigned maintenance notifications and maintenance plans.

# Generating a List of Linked Objects

1. Generate a list of object links using the selection function [Page 17].
2. Select the object links to be included in the evaluation.
3. Choose *Extras* → *Nodes* → *List*.

   The system creates a list of all the nodes.

   The links "Bio-channel 1" and "Sewage conveyor" are selected in the list of selected links. The list of nodes contains the following functional locations:

- C1-M Mechanical purification
- C1-B1 1. Biological purification
- C1-STR Sewage treatment

# Generating a List of Link Objects

1. Generate a list of object links using the selection function [Page 17].
2. Select the object links to be included in the evaluation.
3. Choose *Extras* → *LinkObjs.->List*.

   The system creates a list of all the technical objects associated with the selected links.

   The functional locations C1-M and C1-B1 are linked by the functional location "Bio-channel 1", and the functional locations C1-B1 and C1-B2 are linked by the functional location "Bio-channel 2". Both these links are flagged in the list of selected links. After step 3, the list of the link objects (in the screen *Display Object Network: List FuncLocations*) contains both bio-channels. You can call up further data on the bio-channels from here.